NIKON 曝光机介绍

Array Photo

2010.09.07

Ver_2.0

Company Confidential Ver.
Do not copy or distribute. Copyright 2010 CSOT

CSOT-CONFIDENTIAL

课程目标

学习: Nikon设备的基本知识

了解: Nikon机台的基本架构

掌握: Nikon设备由哪些Unit组成，各Unit的基本功能

课程内容

1. Nikon曝光机基本概念
2. Nikon 曝光机各unit构造与功能

Company Confidential Ver.
Do not copy or distribute. Copyright 2010 CSOT

CSOT-CONFIDENTIAL

课程大纲

1. 概要

2. 各Unit简要说明
   - 2-1. Machine Outline
   - 2-2. Illumination System
   - 2-3. Projection Lens System
   - 2-4. Mask Stage
   - 2-5. Plate Stage
   - 2-6. Plate Loader
   - 2-7. Mask Loader

Company Confidential Ver.
Do not copy or distribute. Copyright 2010 CSOT

CSOT-CONFIDENTIAL

FX-86S Machine Outline

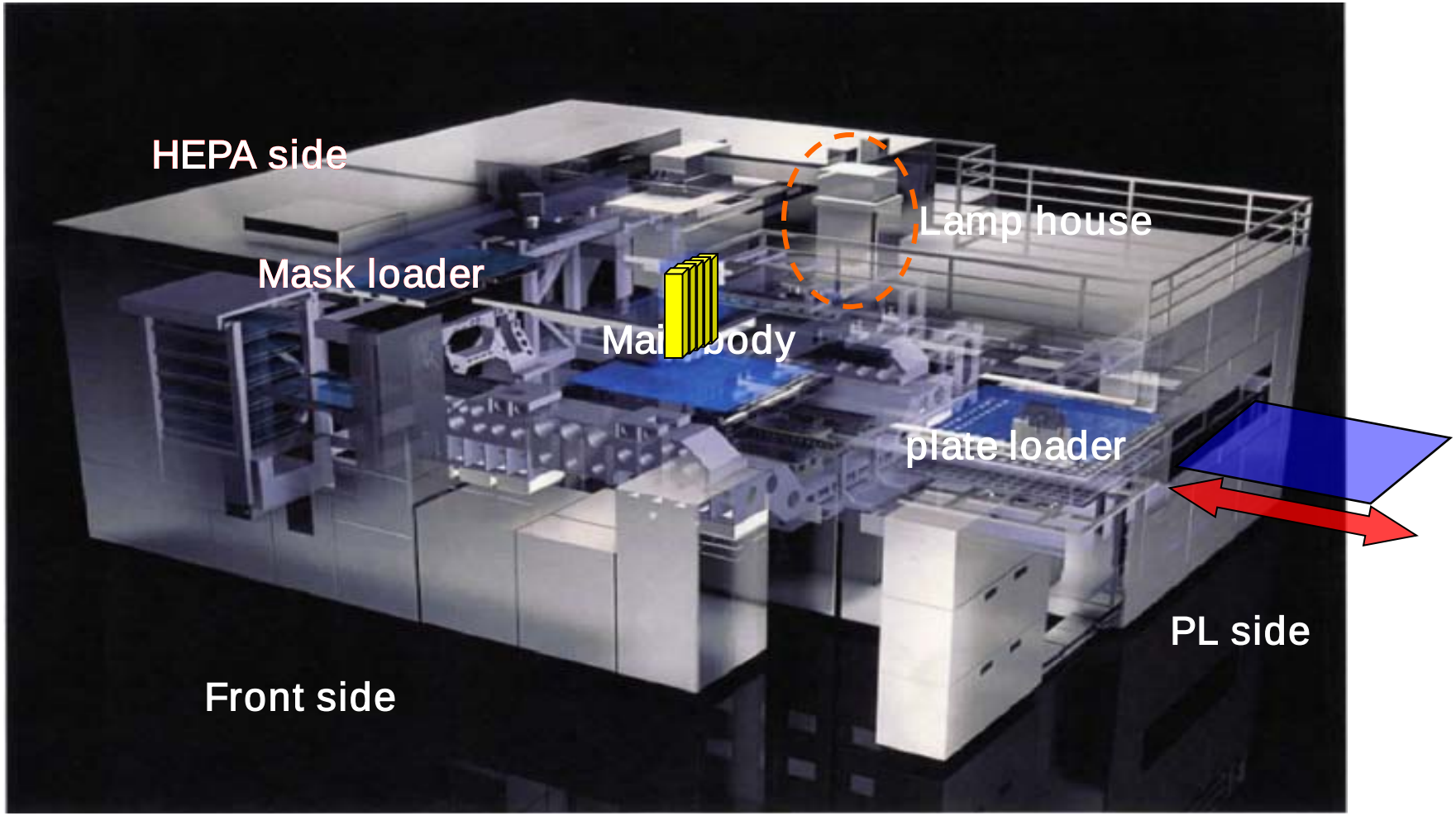

Machine Outline(Top View)

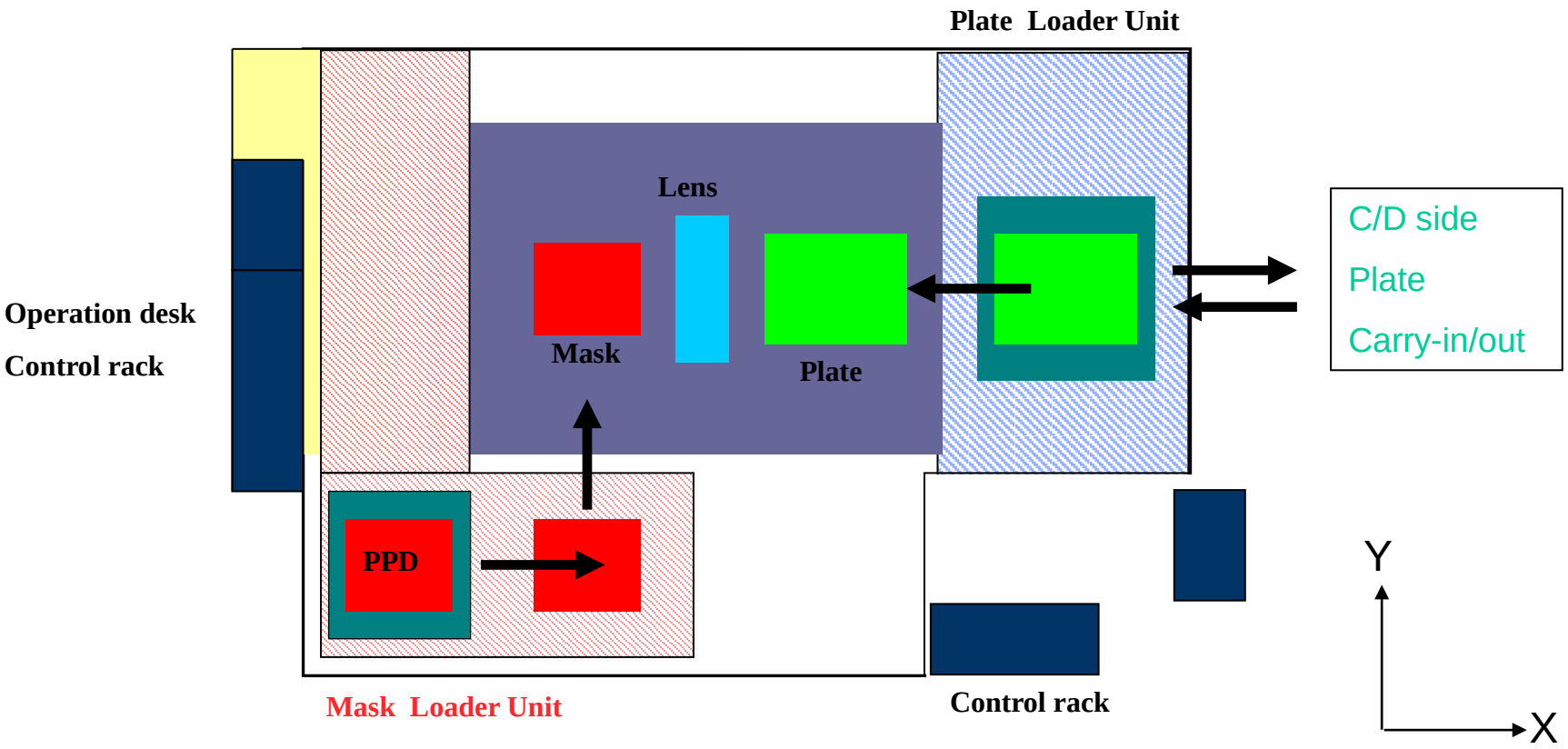

Illumination System

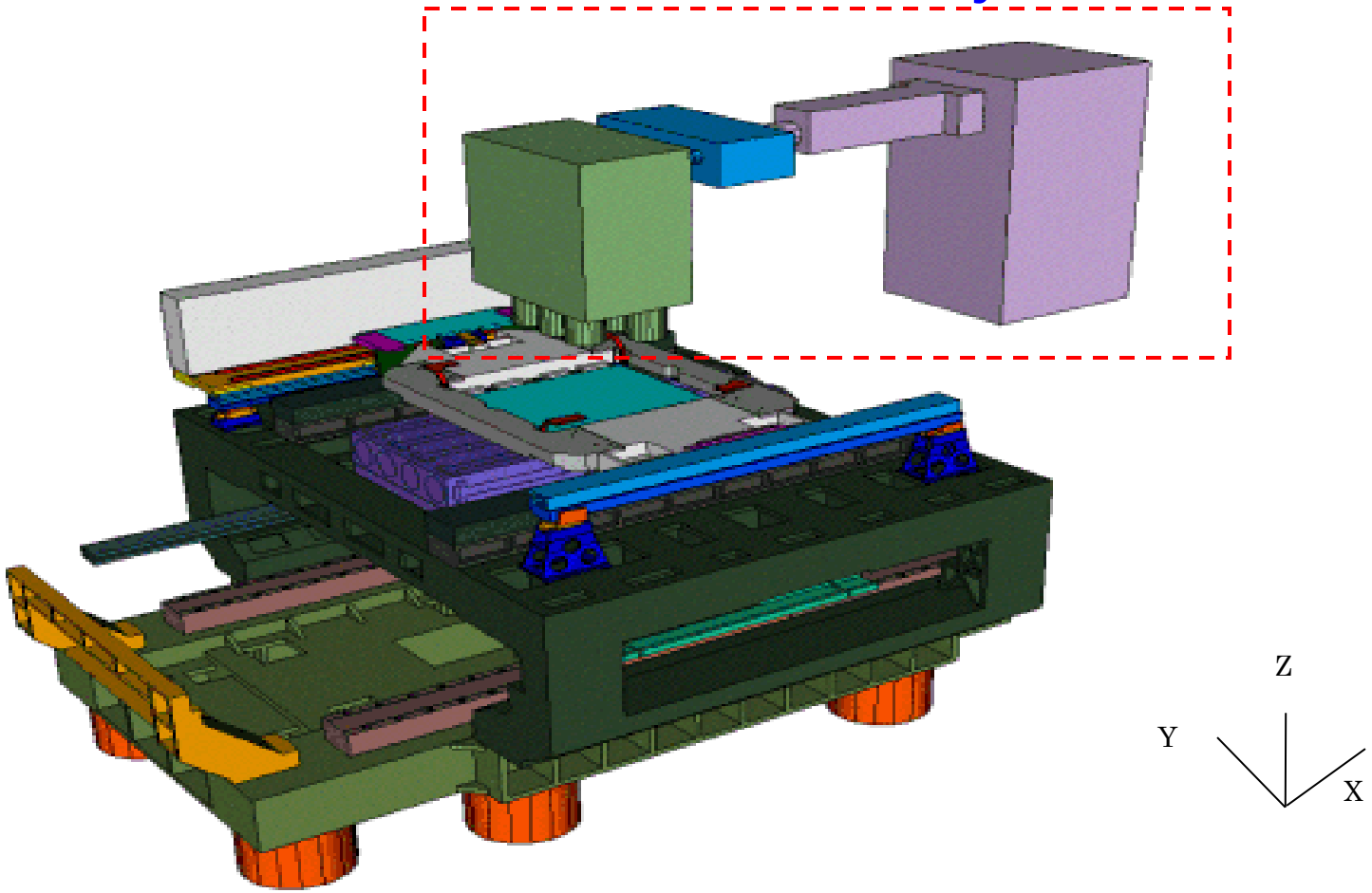

Company Confidential Ver.
Do not copy or distribute. Copyright 2010 CSOT

CSOT-CONFIDENTIAL

Illumination System

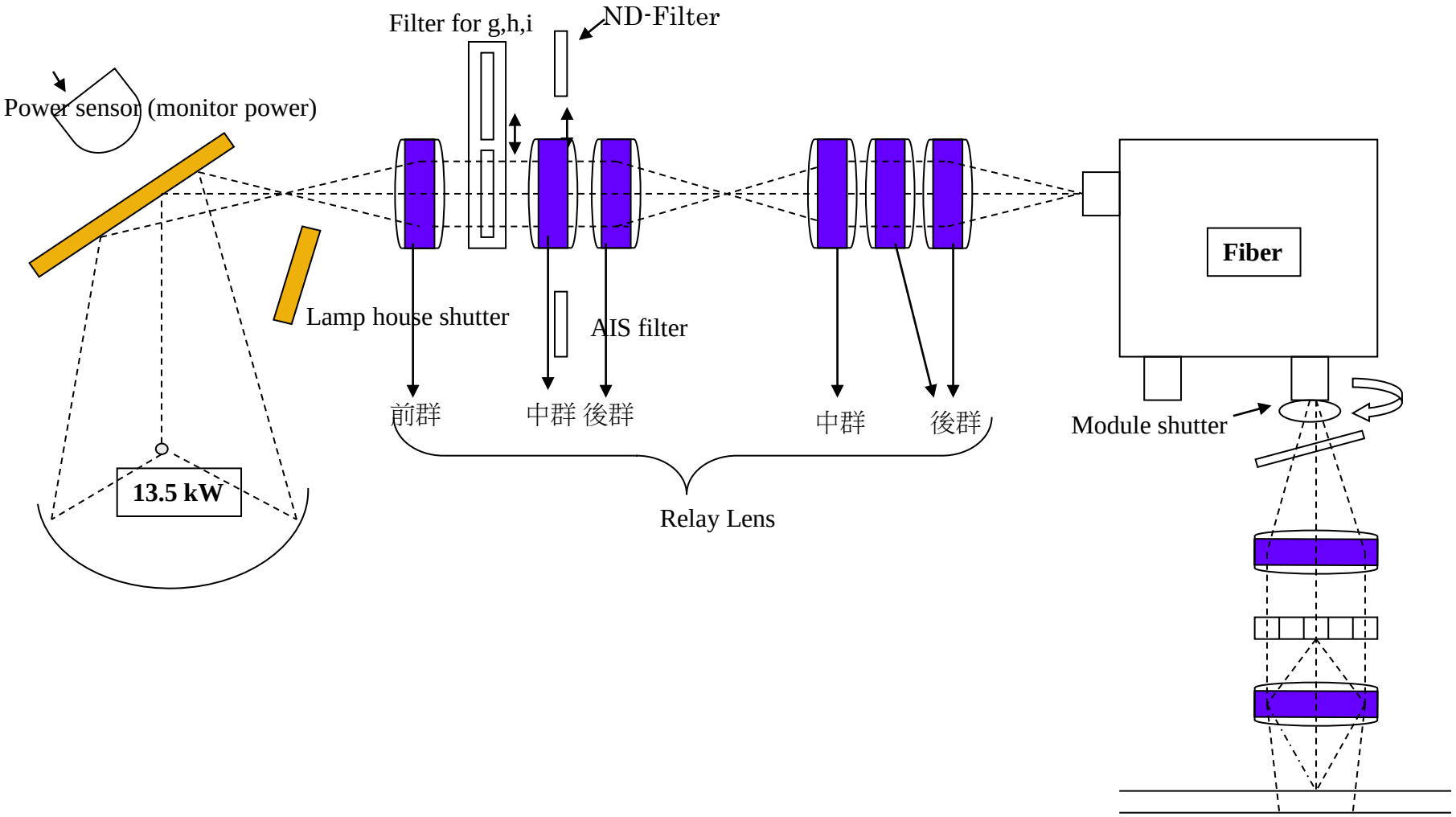

Illumination System

Mercury Lamp：使用13.5KW高壓汞燈，發出的光線由g，h，i-line三種波長所組成的

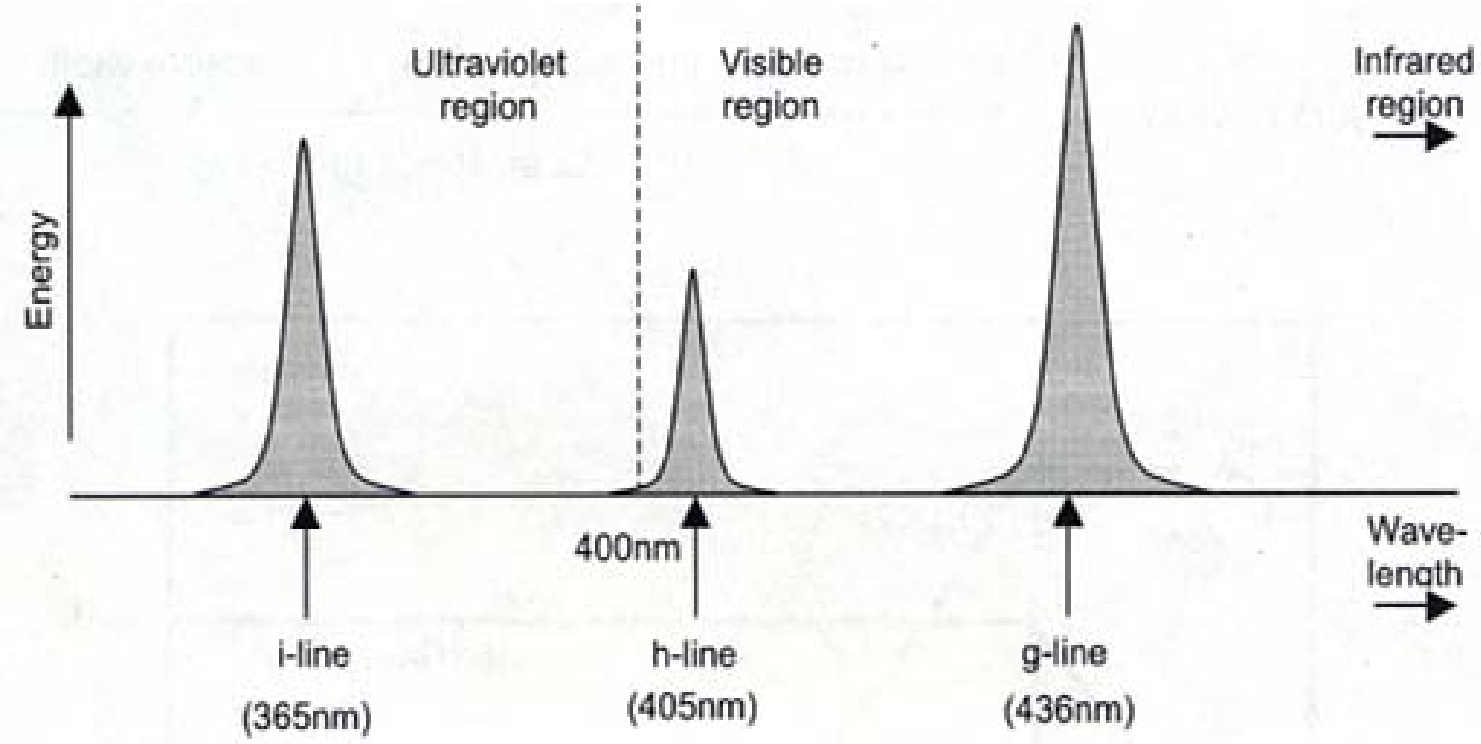

Lamp shutter: Scan時shutter才會打開，alignment時shutter是關閉的，反應的時間在0.5s以下

Do not copy or distribute. Copyright 2010 CSOT

CSOT-CONFIDENTIAL

Mask Stage

Mask Stage

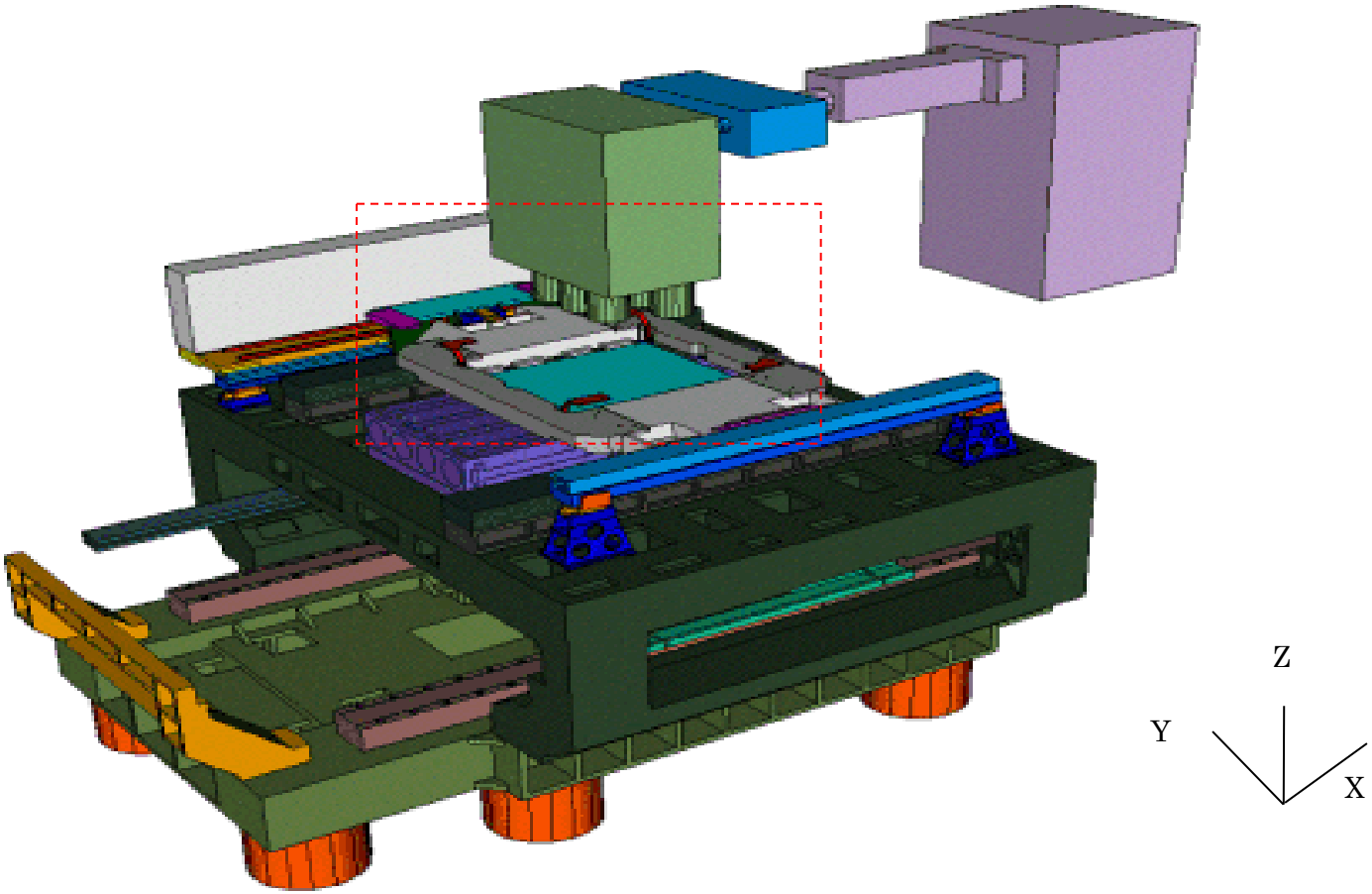

Company Confidential Ver.
Do not copy or distribute. Copyright 2010 CSOT

CSOT-CONFIDENTIAL

Mask Stage

Sub stage 與main stage分開,可用來固定管線,並減少由**外部帶來之振動源,較不會影響scan**

Wiring & Piping

Mask Sub Stage

Sub stage 跟著Main stage行進

Mask Main Stage

Linear Motor

X Blind

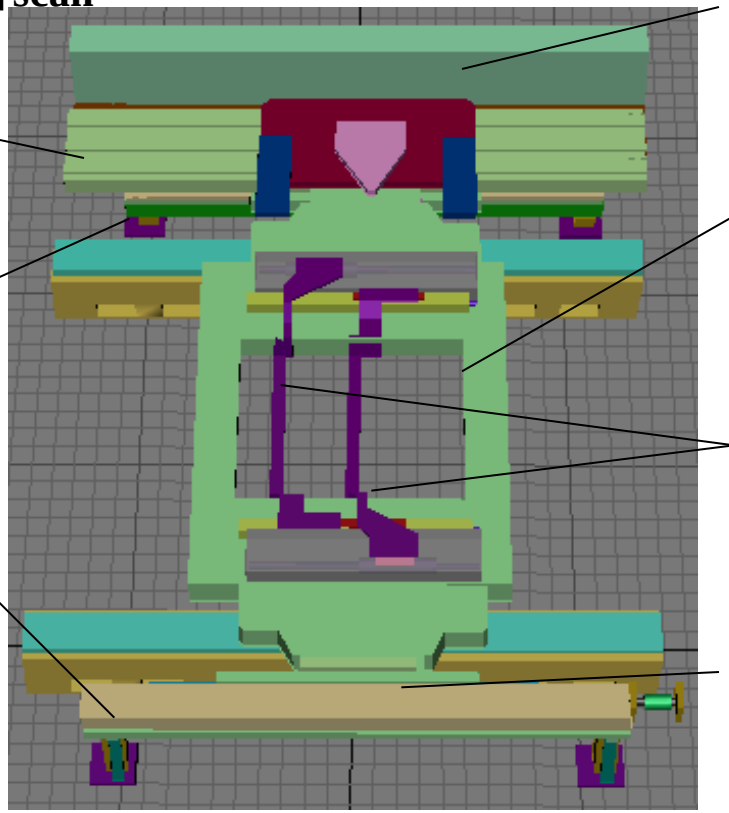

Top View

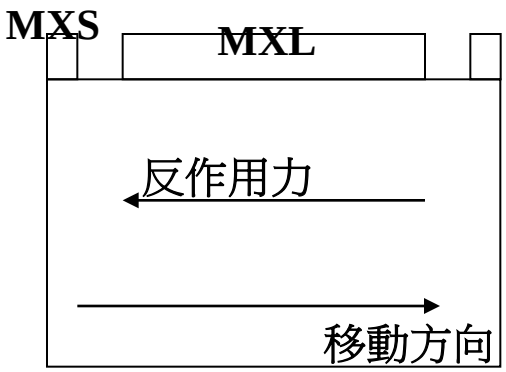

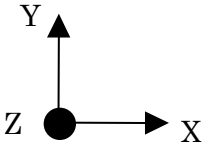

Company Confidential Ver.
Do not copy or distribute. Copyright 2010 CSOT

CSOT-CONFIDENTIAL

Mask Stage

Mask stage: Mask位置控制(X ,Y ,θ補正)、並追從Plate stage而進行曝光動作。

Mask sub stage:固定管線，且可減少管線由外部帶來之振動源，較不會影響scan

Interferometer & bar mirror:

控制Mask移動精度，與plate stage精度誤差在±2um內

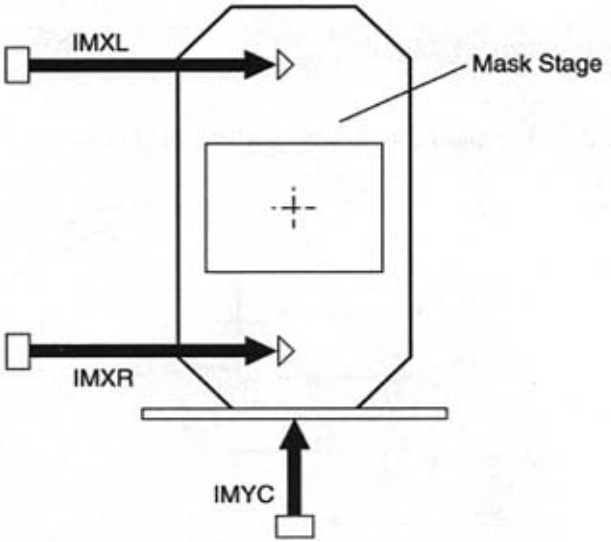

Company Confidential Ver.
Do not copy or distribute. Copyright 2010 CSOT

CSOT-CONFIDENTIAL

Mask Stage

由兩片blades所組成: +X side and –X side. Blind主要是用來遮exposure area外多餘的光，可避免非exposure area曝光（在Blind交界處有6mm模糊地帶）。如下

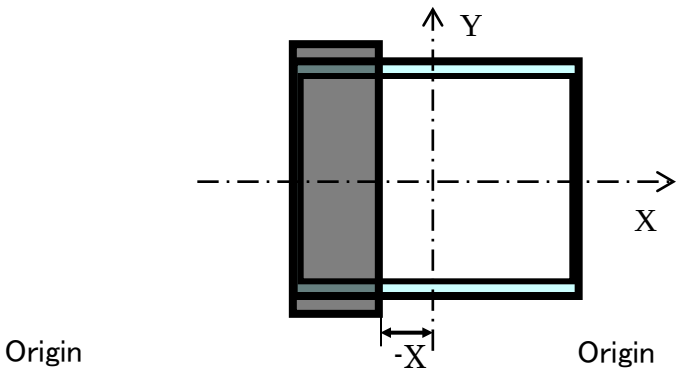

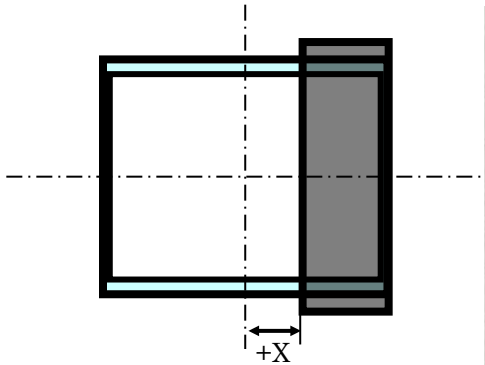

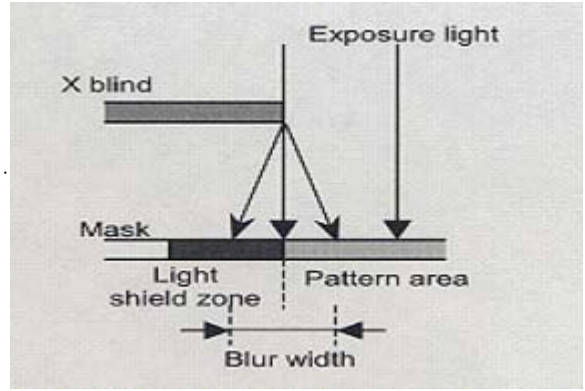

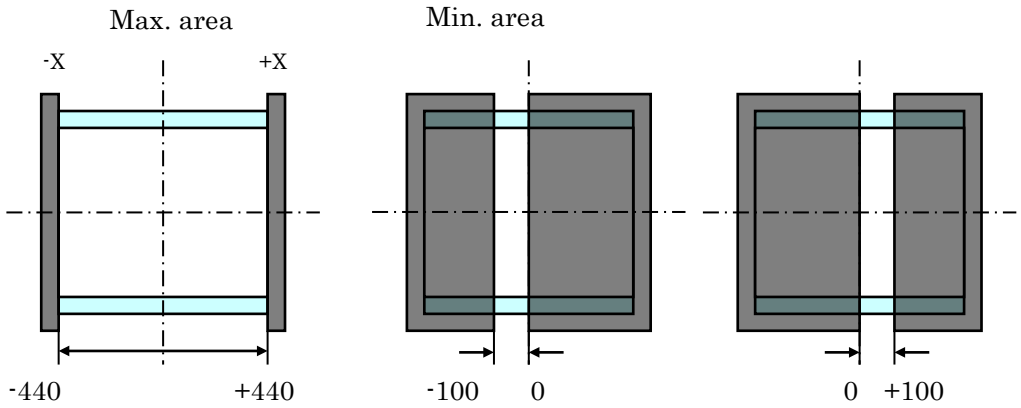

Mask Stage

由四片blades所組成: 可區分為

+Y side

–Y side

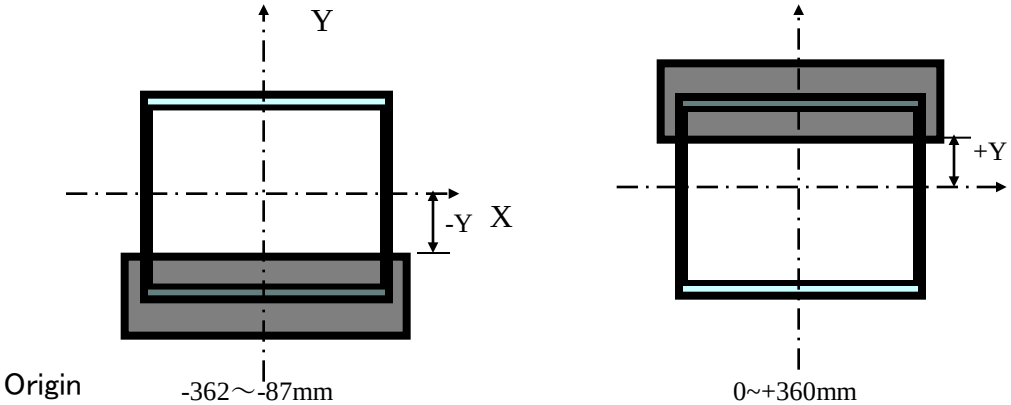

Max. area

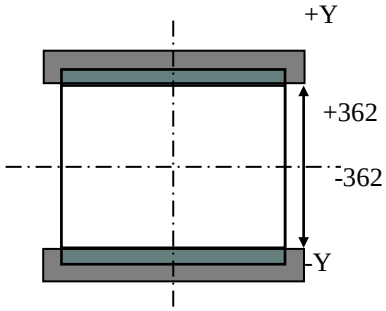

Min. area

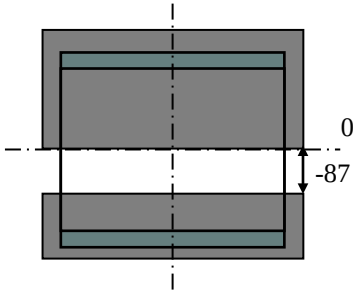

Company Confidential Ver.
Do not copy or distribute. Copyright 2010 CSOT

CSOT-CONFIDENTIAL

Projection Lens System

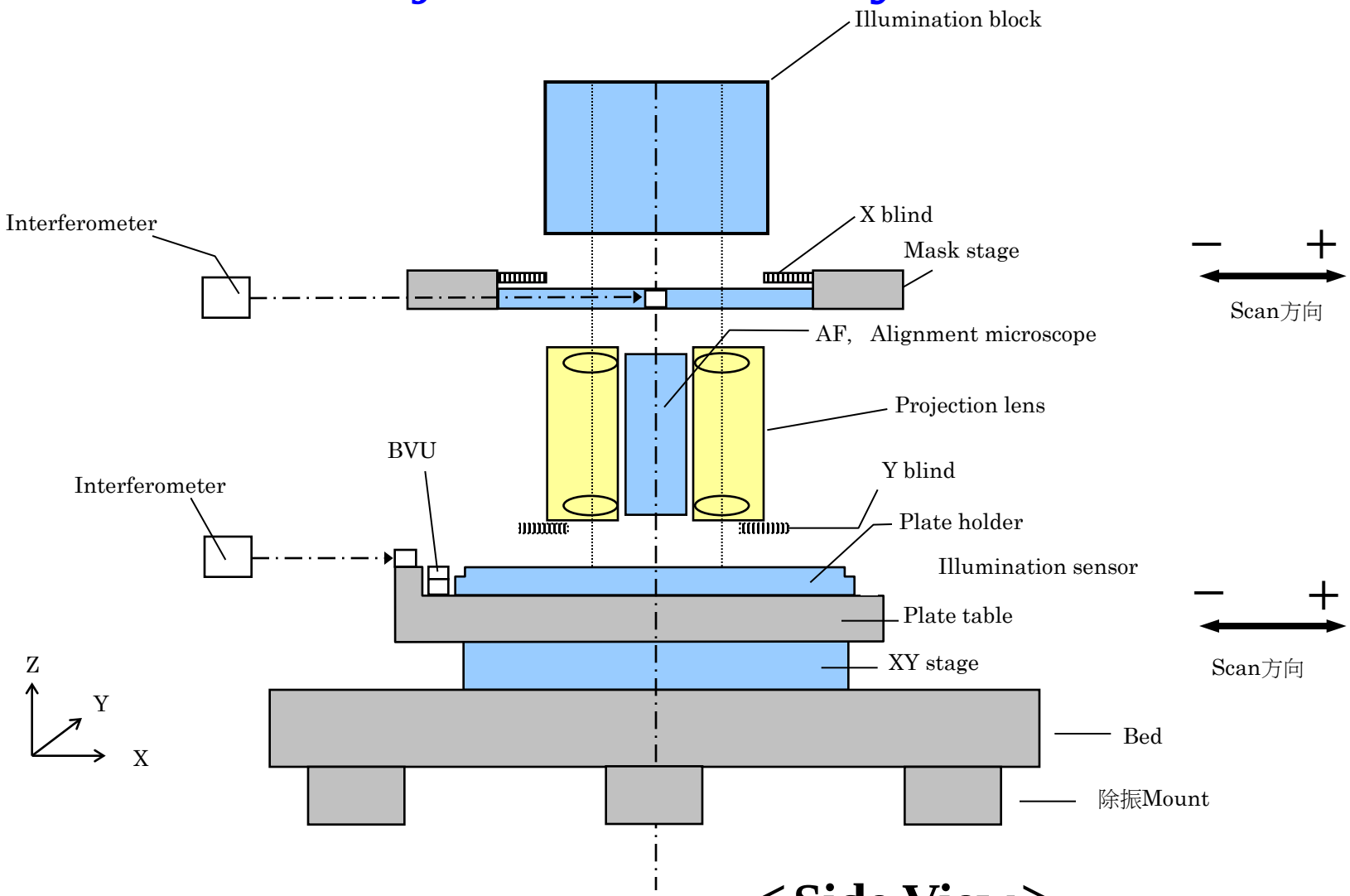

＜Side View＞

Projection Lens System

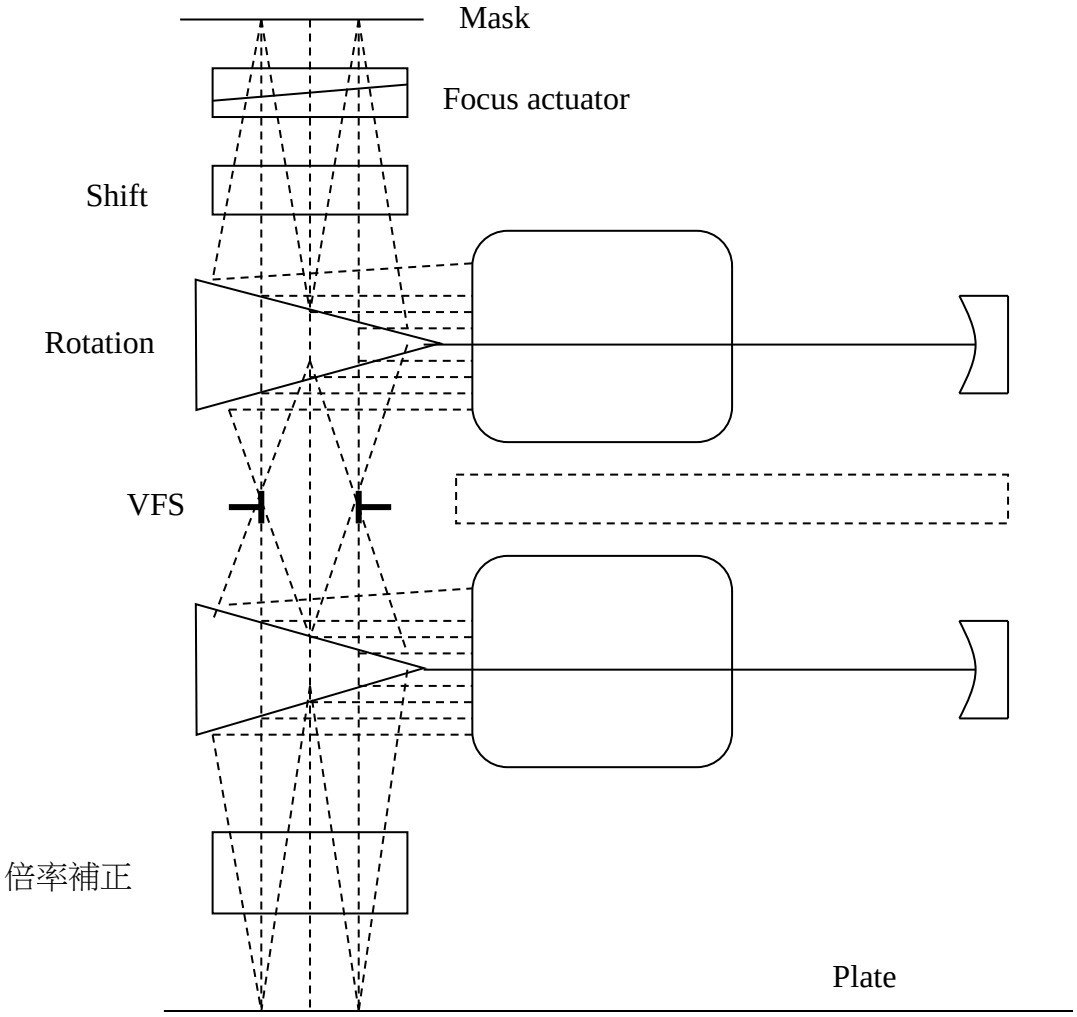

Company Confidential Ver.
Do not copy or distribute. Copyright 2010 CSOT

CSOT-CONFIDENTIAL

Projection Lens System

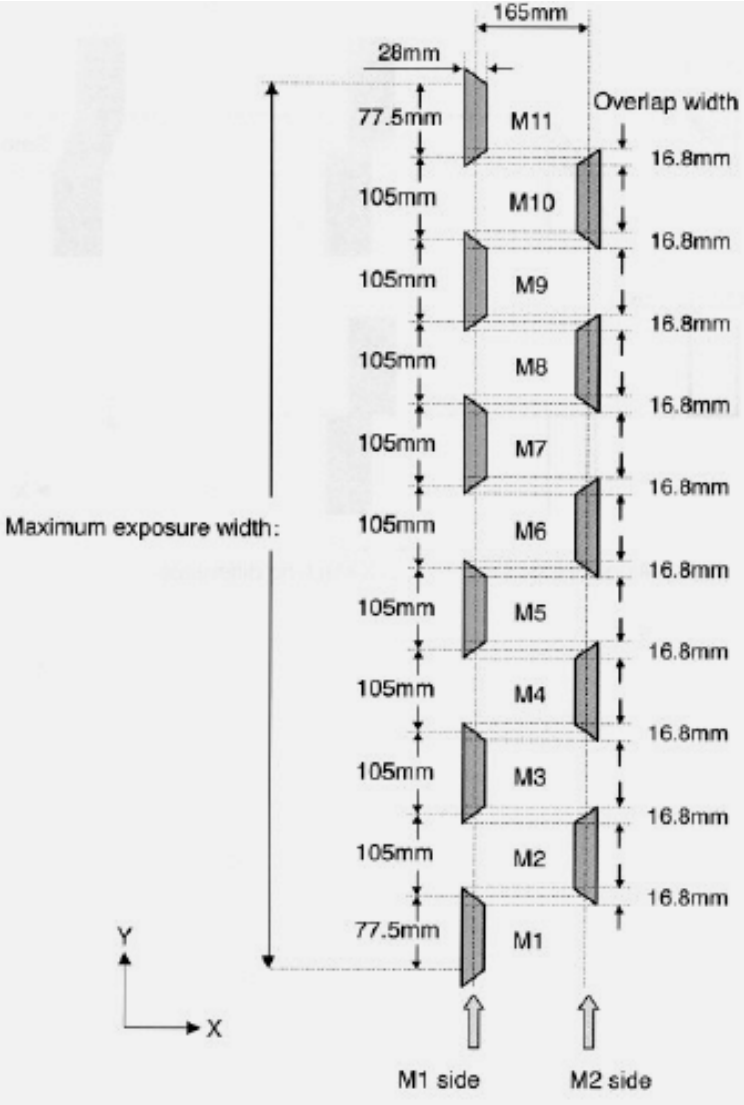

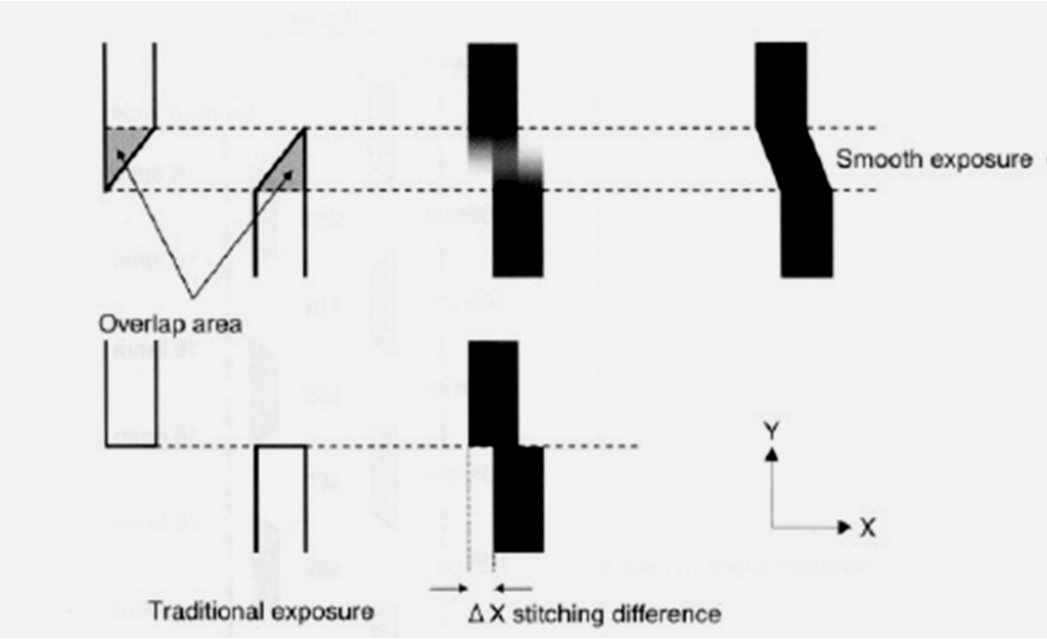

Do not copy or distribute. Copyright 2010 CSOT

CSOT-CONFIDENTIAL

Projection Lens System

Focus actuator

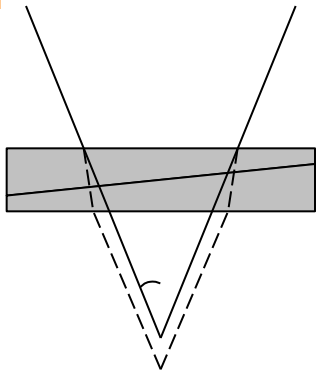

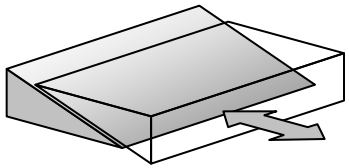

Focus actuator: 其功能在補正mask bending量，補正範圍50um，利用兩塊三角形的菱鏡的補償，使得聚焦的深度不同，進而補償到mask bending部份。

Do not copy or distribute. Copyright 2010 CSOT

CSOT-CONFIDENTIAL

Projection Lens System

Shift X Y

－採用平面鏡片，藉由X、Y軸方向驅動讓光軸傾斜，使得投影位置因而偏移

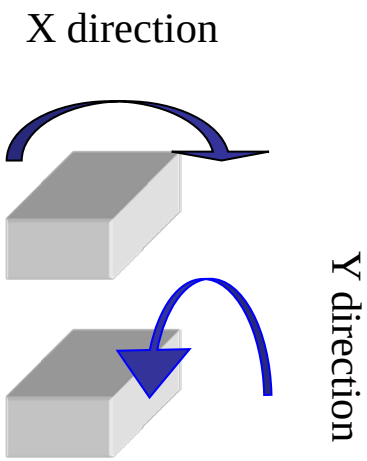

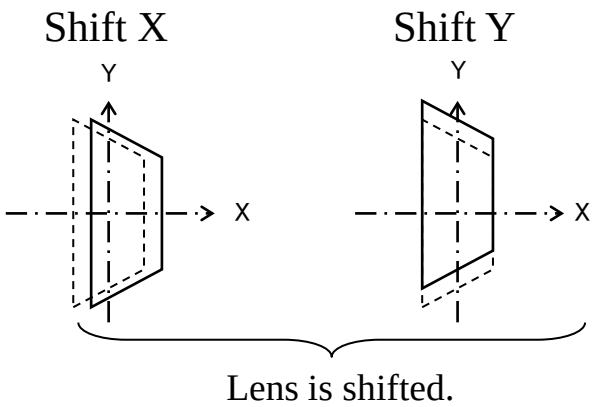

Projection Lens System

Rotation

－以Piezo驅動Prism，藉此投影像可沿Z軸迴轉

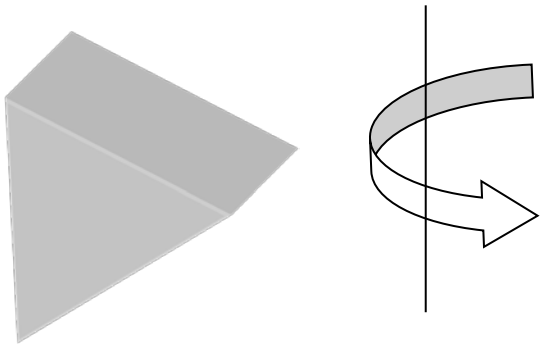

Rot

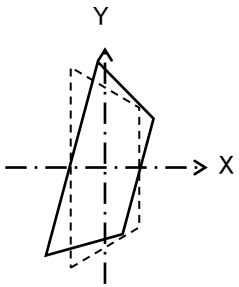

Prism is rotated.

Projection Lens System

Magnification

一由3片鏡片所組成，藉以改變鏡片位置來調整像倍率

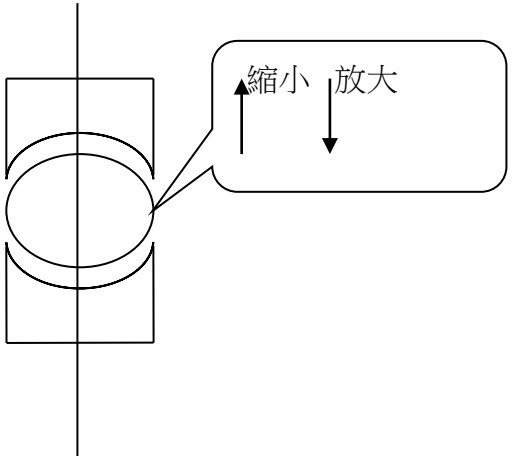

Mag

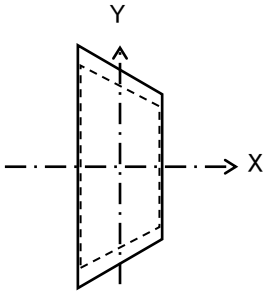

Magnification lens is driven.

Company Confidential Ver.
Do not copy or distribute. Copyright 2010 CSOT

CSOT-CONFIDENTIAL

Plate Stage

Plate Stage

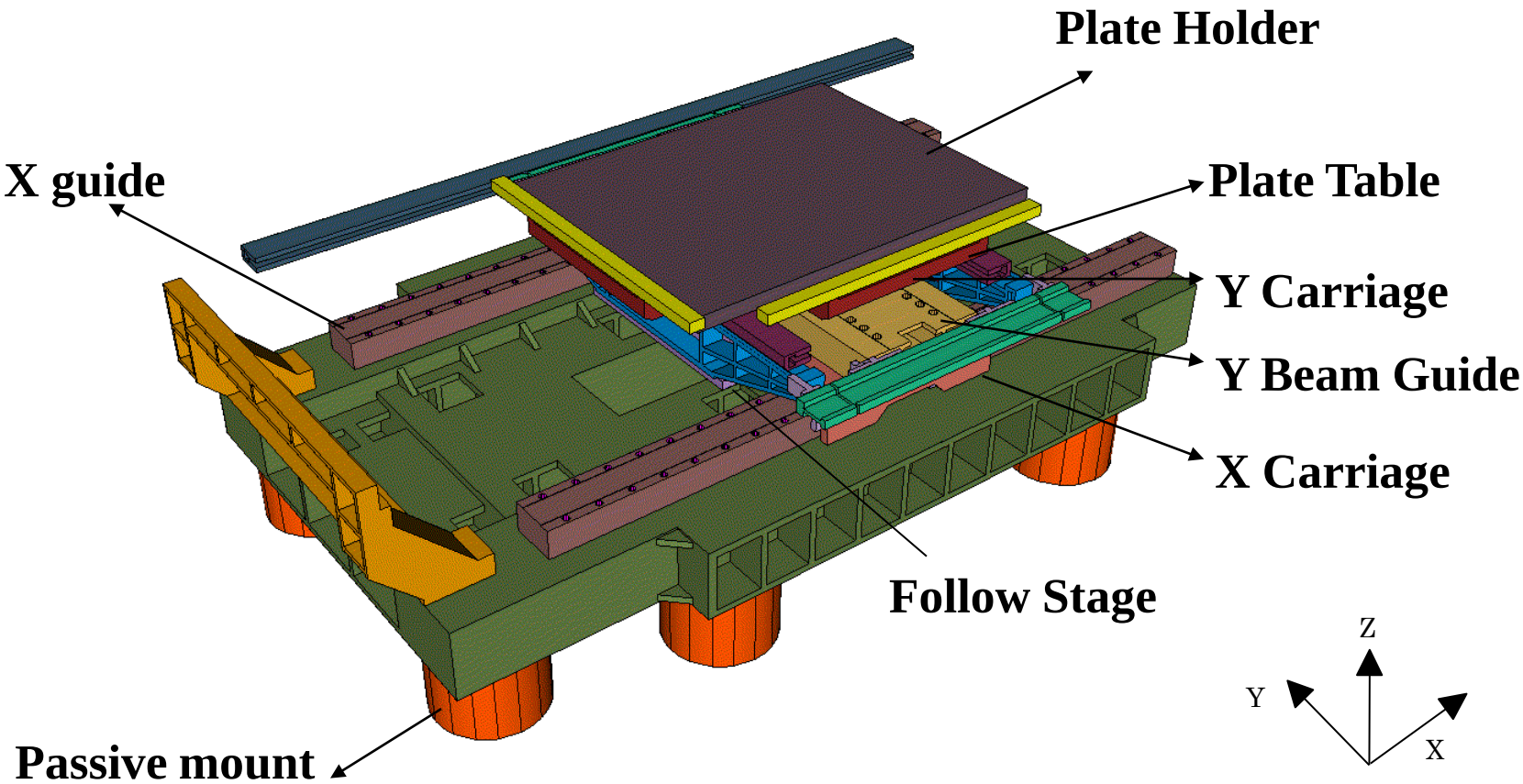

Company Confidential Ver.
Do not copy or distribute. Copyright 2010 CSOT

CSOT-CONFIDENTIAL

Plate Stage

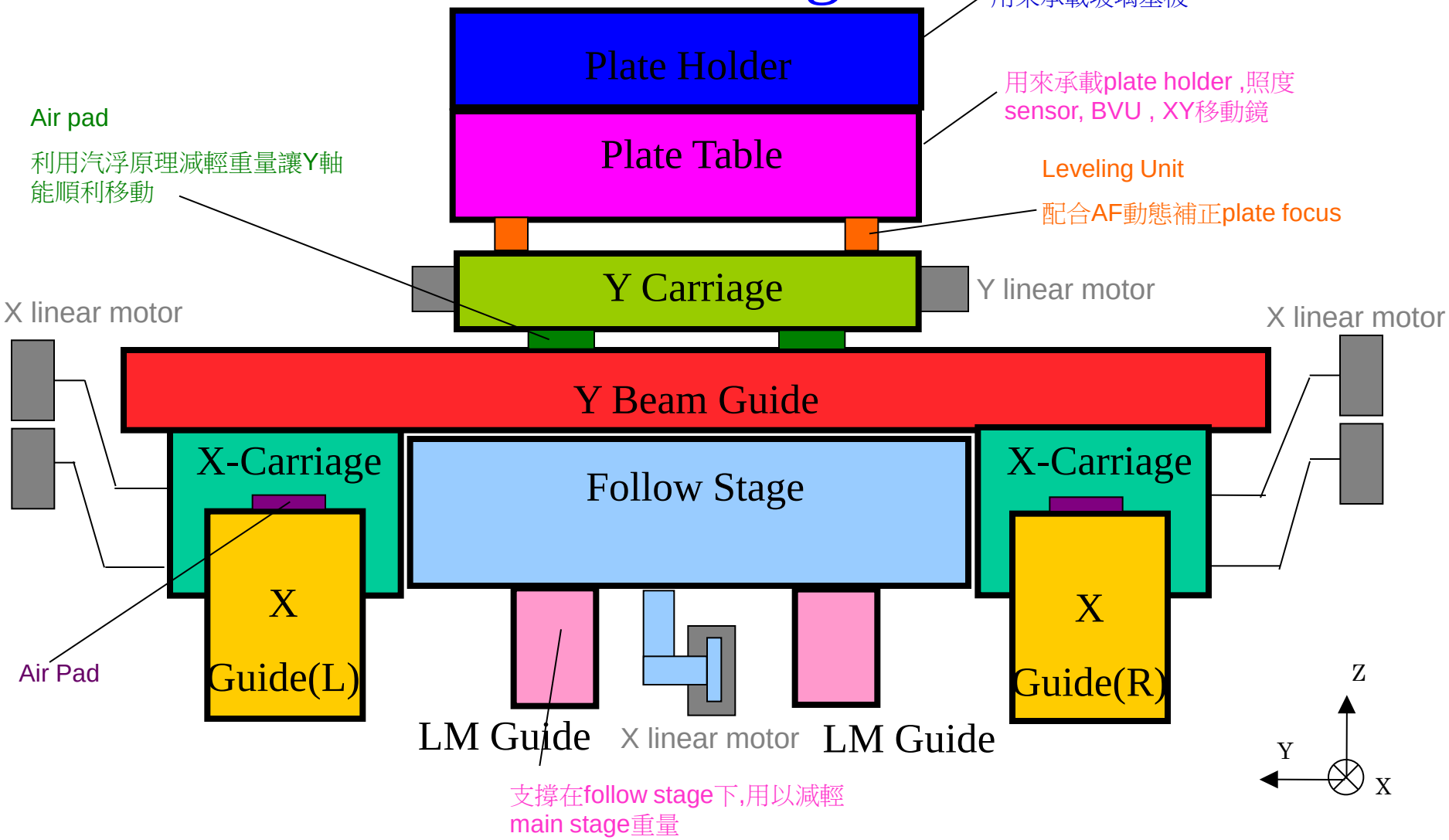

Do not copy or distribute. Copyright 2010 CSOT

CSOT-CONFIDENTIAL

Plate Stage

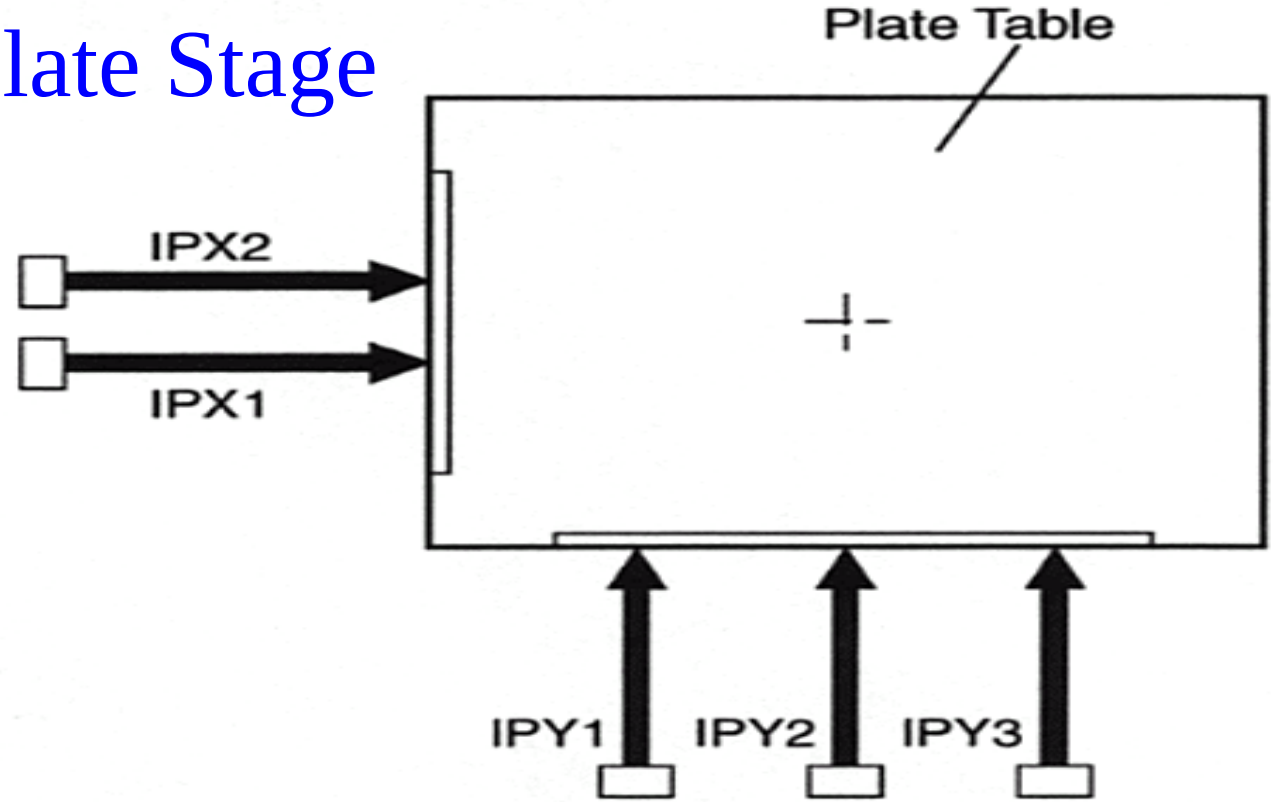

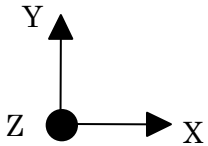

IPY1: -220≦領域≦+1250(1100) mm

IPY2: -760mm≦領域≦+760 mm

IPY3: -1250(1100)mm≦領域≦+220 mm

Company Confidential Ver.
Do not copy or distribute. Copyright 2010 CSOT

CSOT-CONFIDENTIAL

Plate Stage

Plate Table

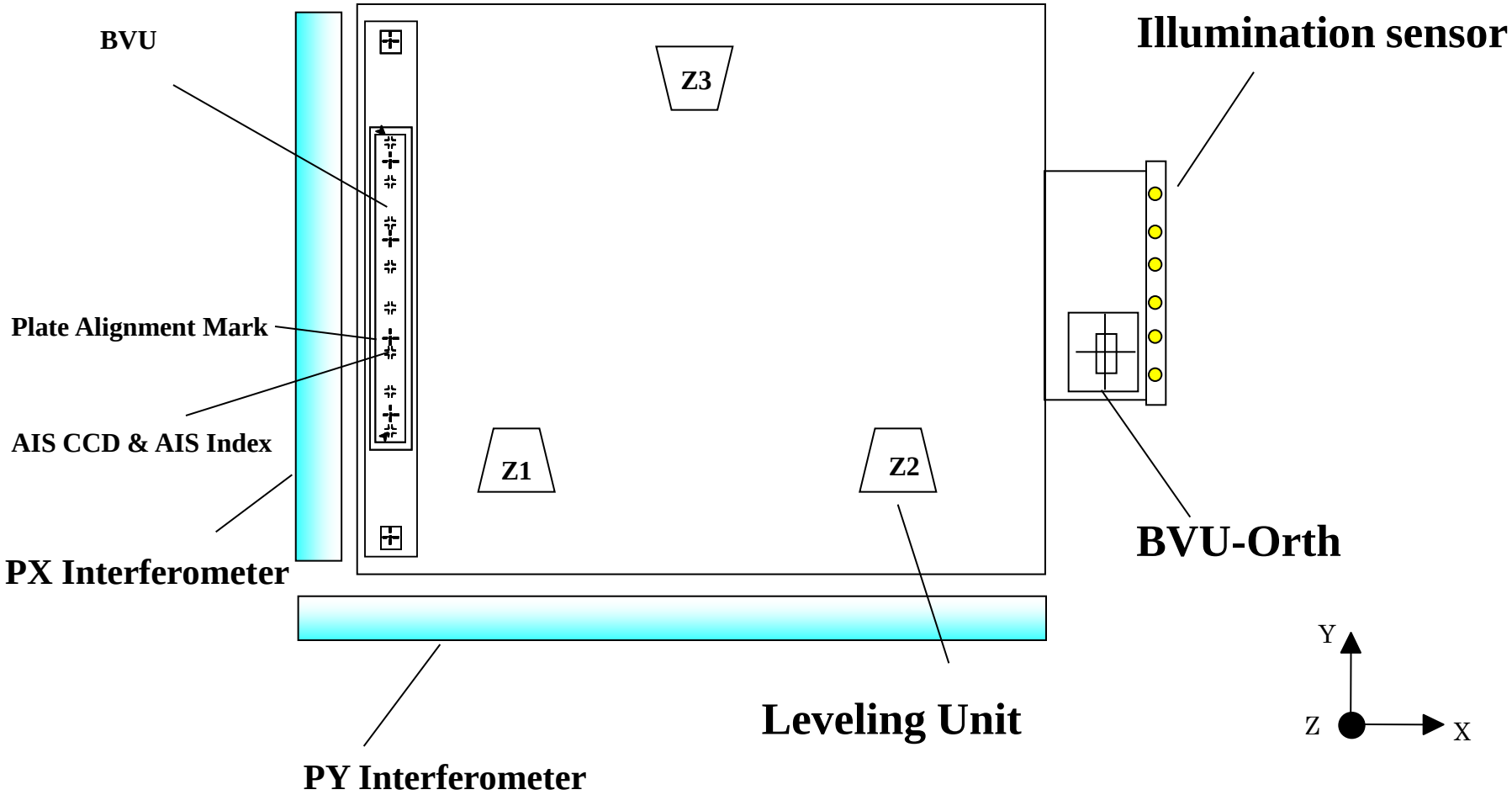

Plate Stage

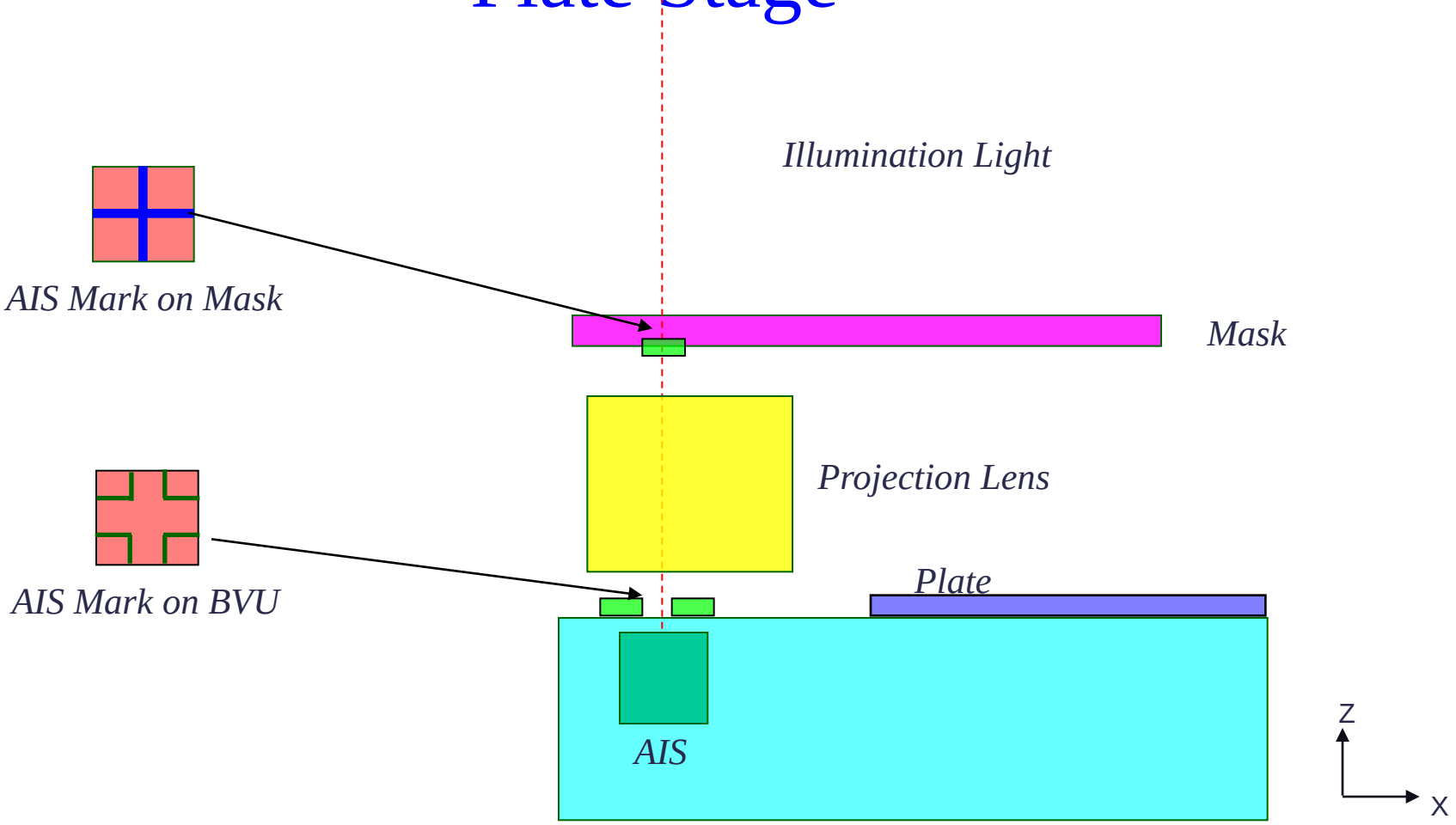

Company Confidential Ver.
Do not copy or distribute. Copyright 2010 CSOT

CSOT-CONFIDENTIAL

Projection Lens

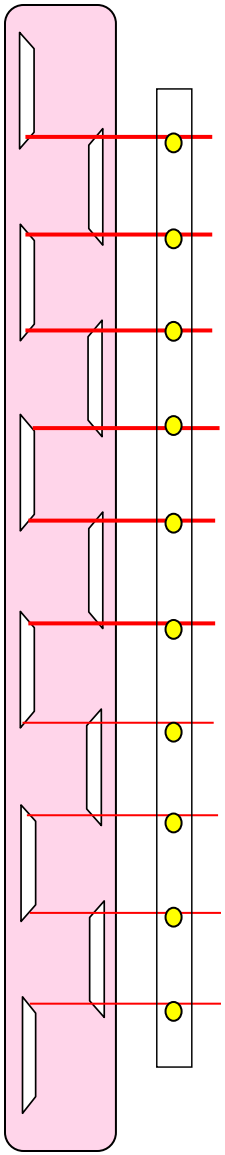

Illumination Sensor

ISP10

ISP9

ISP8

ISP7

ISP6

ISP5

ISP4

ISP3

ISP2

ISP1

Plate Stage

整體照度：3%

單一Module：1.5%

接續處：1%

Company Confidential Ver.
Do not copy or distribute. Copyright 2010 CSOT

CSOT-CONFIDENTIAL

Plate Loader

Component :In-line port ,Upper Arm ,Lower Arm

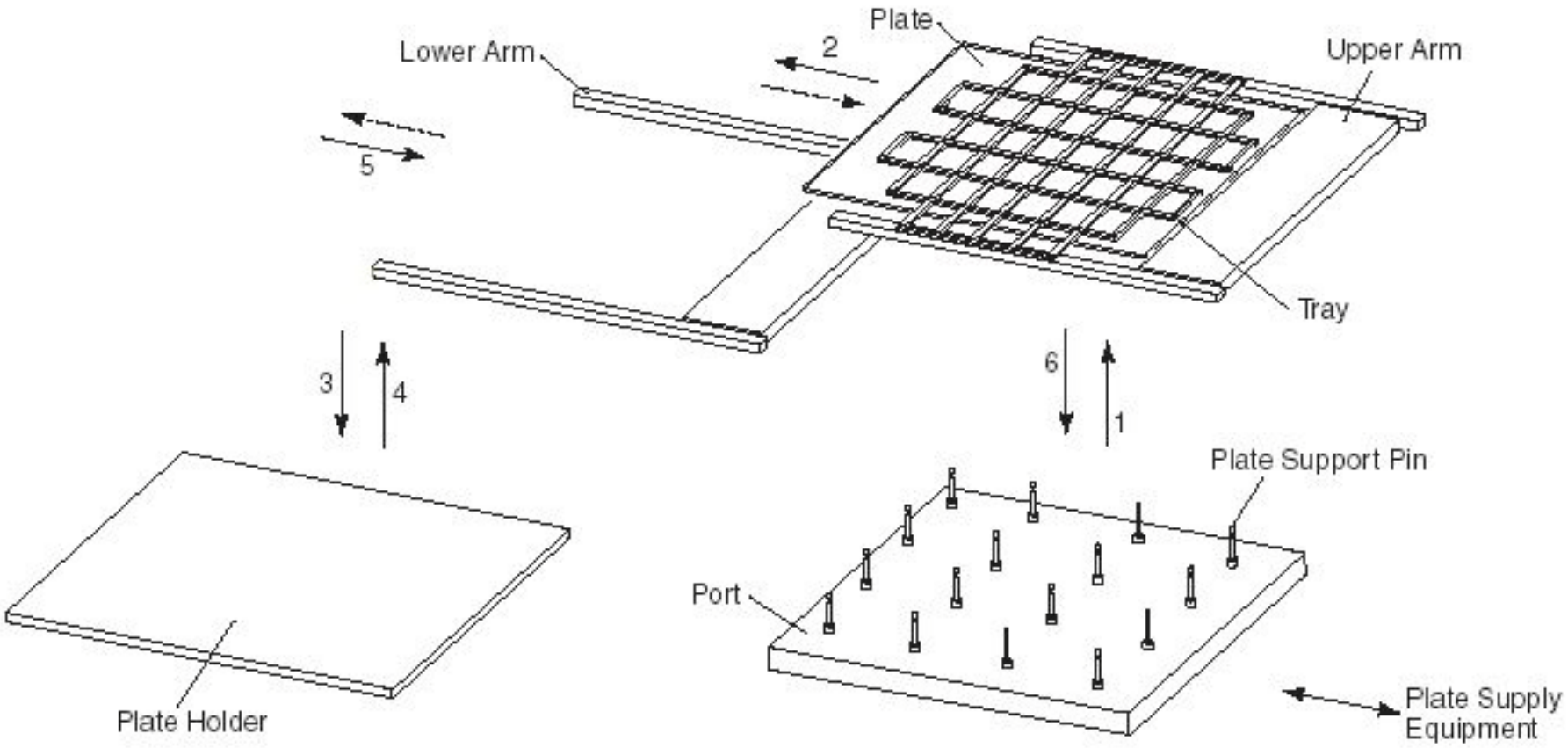

Plate Loader(Inline port)

Function :Plate Alignment

Using three line-sensors (X 、Y 、θ Adiustment)

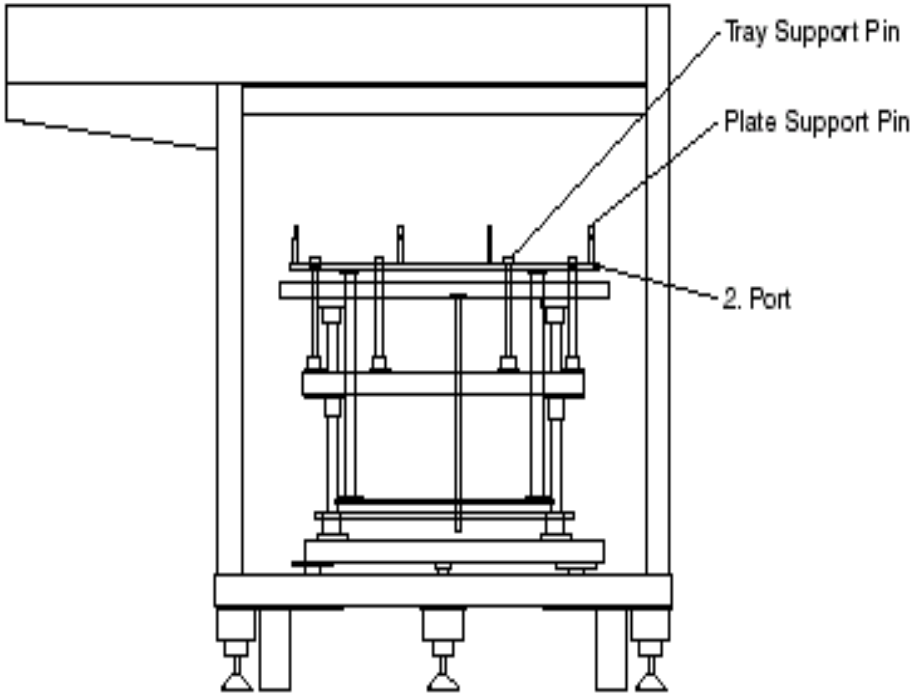

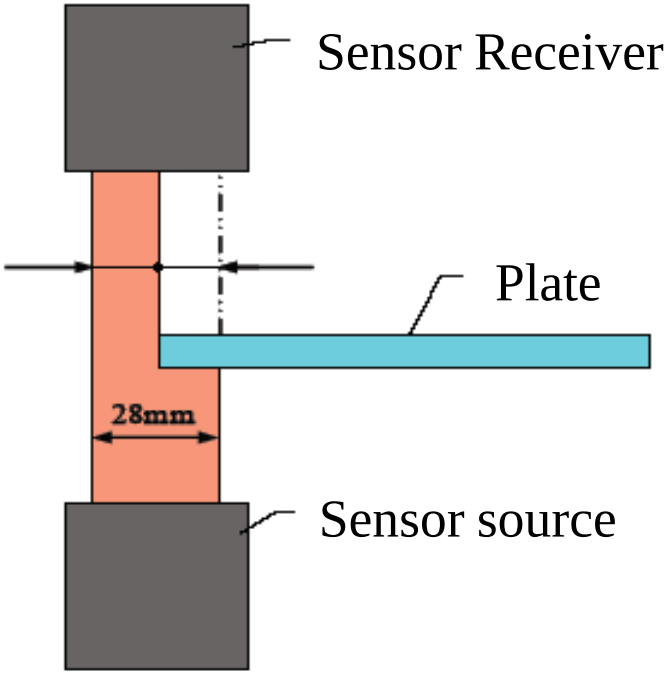

<Front View>

Company Confidential Ver.
Do not copy or distribute. Copyright 2010 CSOT

CSOT-CONFIDENTIAL

Plate Loader(Upper/Lower Arm)

Function :1. Transfer plate (including tray)

between Inline port & plate stage

2. Upper Arm θ Adjustment

(0.3mrad以下)

Company Confidential Ver.
Do not copy or distribute. Copyright 2010 CSOT

CSOT-CONFIDENTIAL

Plate Loader

⑤Transfer sequence

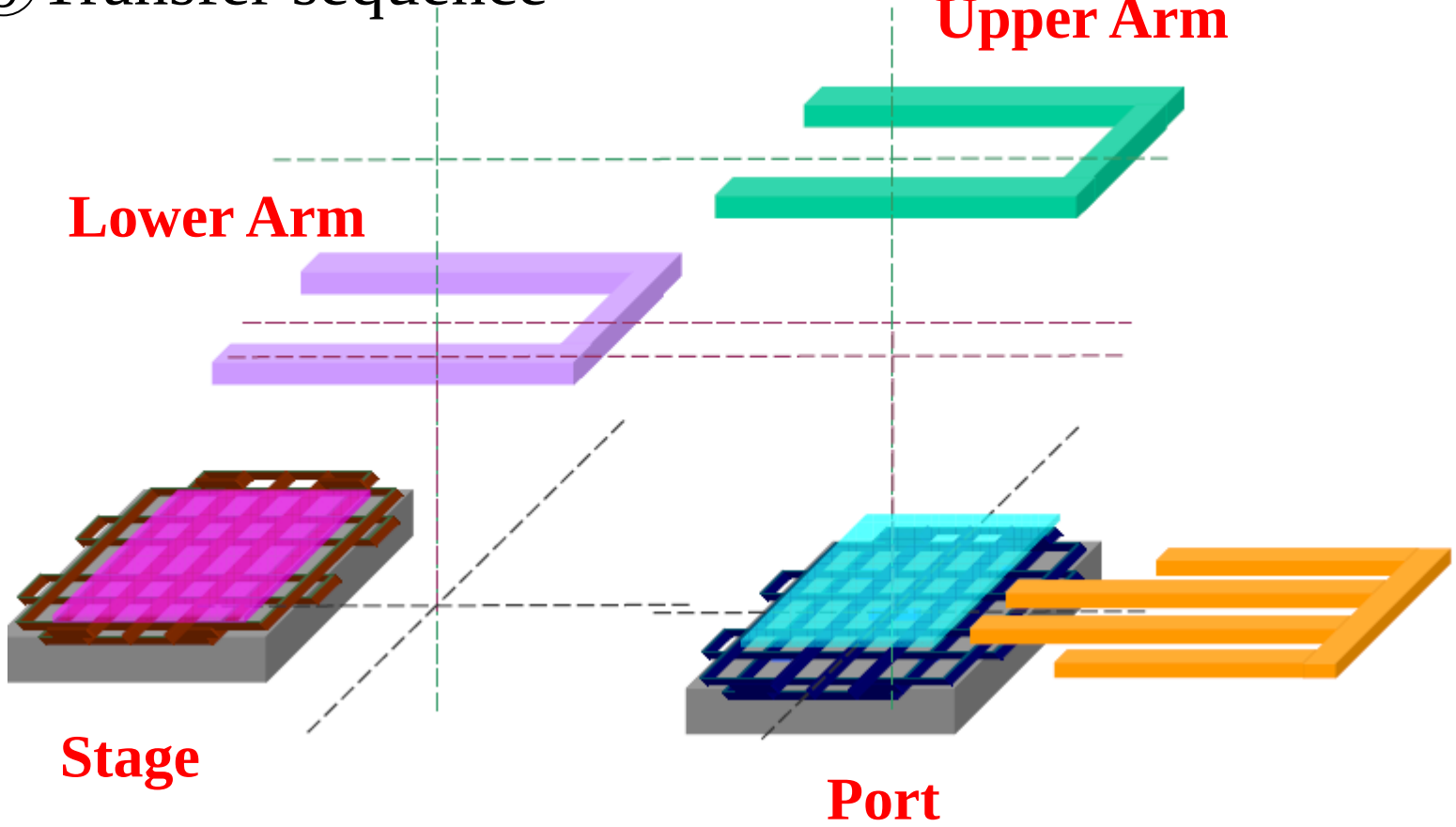

Plate Loader

Port alignment－Inline port X、Y、θ調整

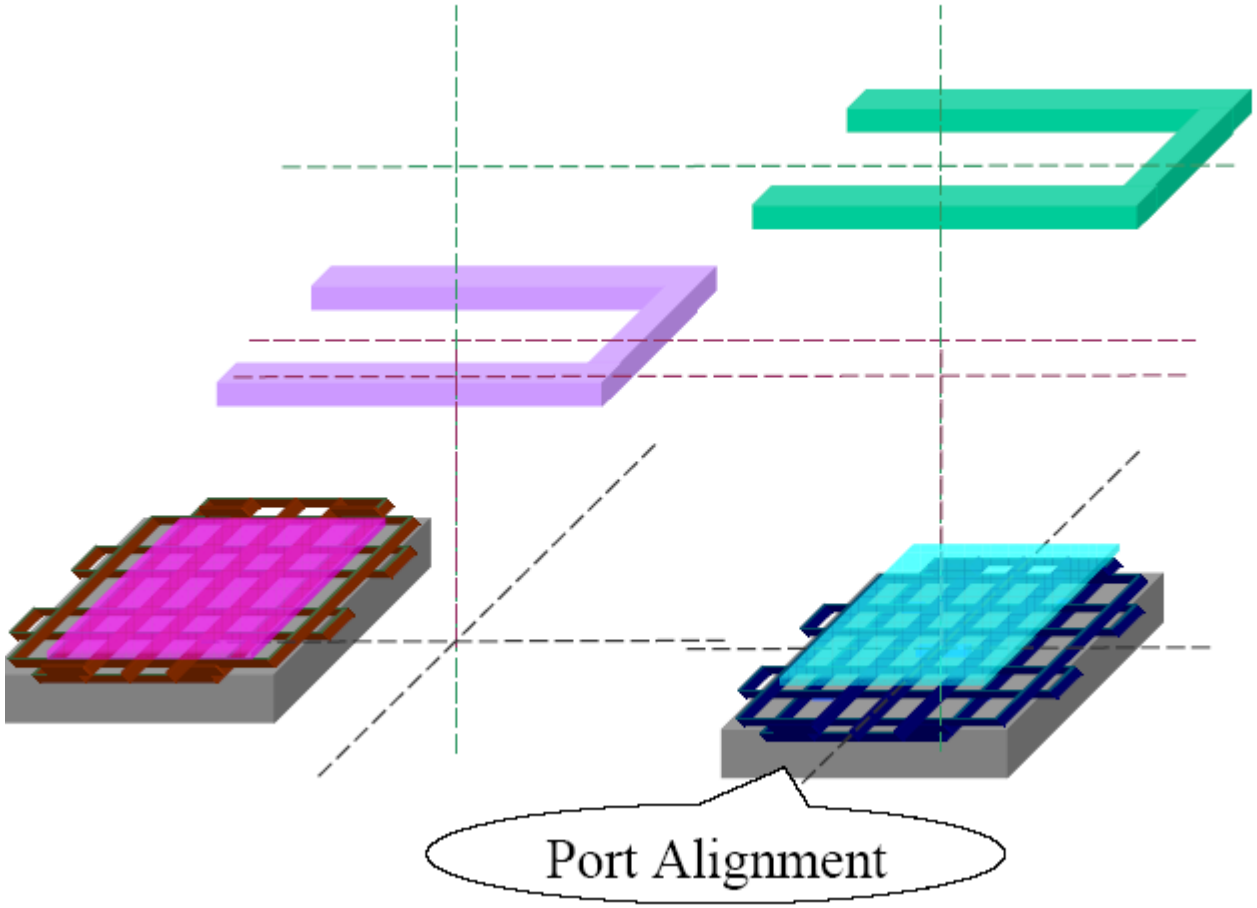

Plate Loader

Alignment－ Upper Arm θ調整　(0.3mrad以下)

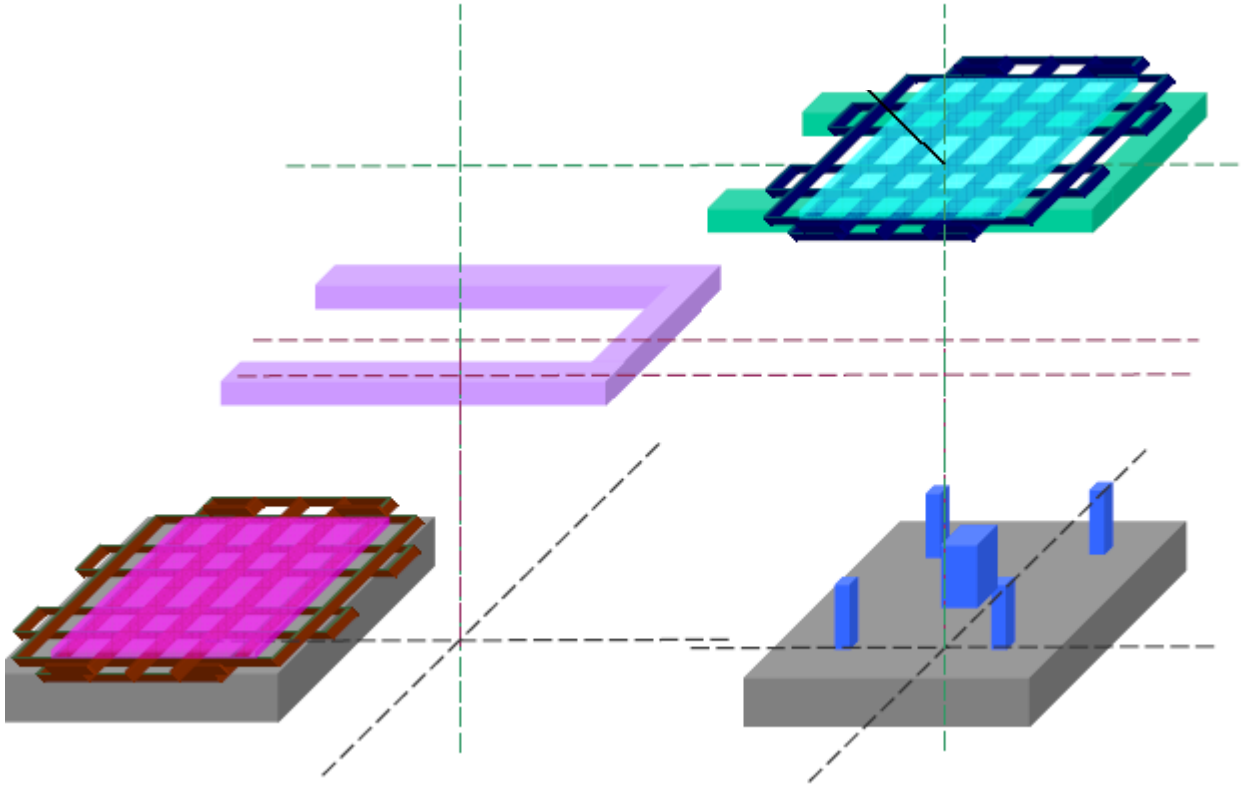

Company Confidential Ver.
Do not copy or distribute. Copyright 2010 CSOT

CSOT-CONFIDENTIAL

Plate Loader

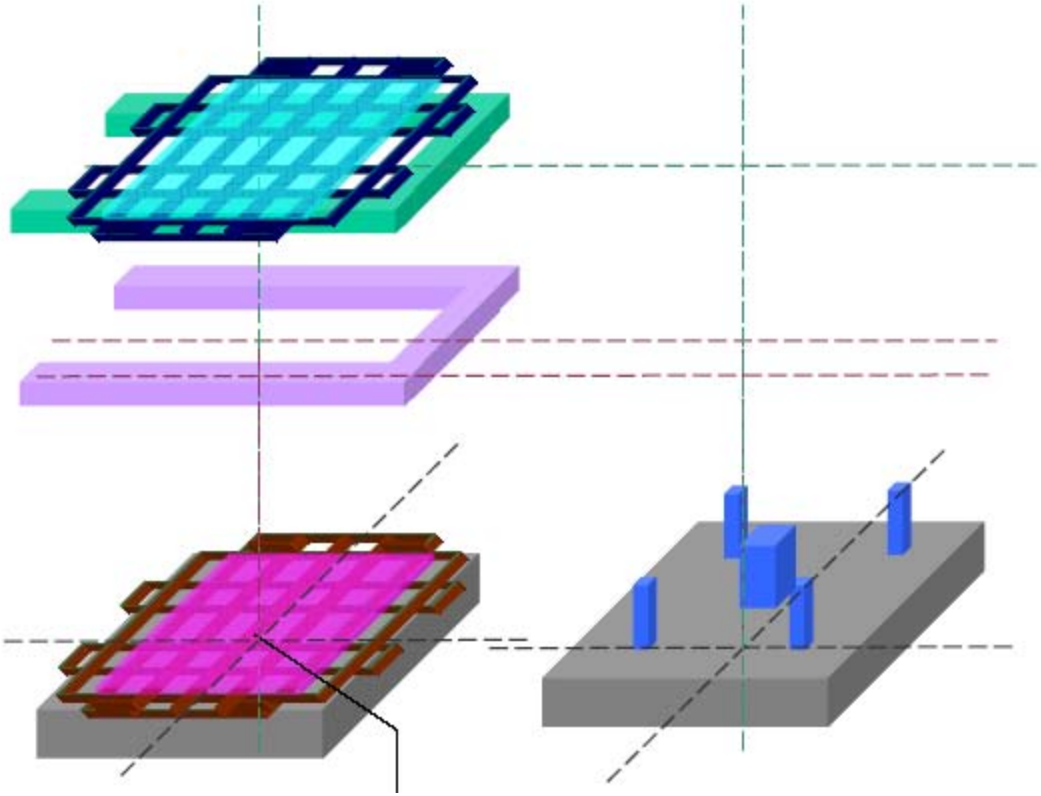

Company Confidential Ver.
Do not copy or distribute. Copyright 2010 CSOT

CSOT-CONFIDENTIAL

Plate Loader

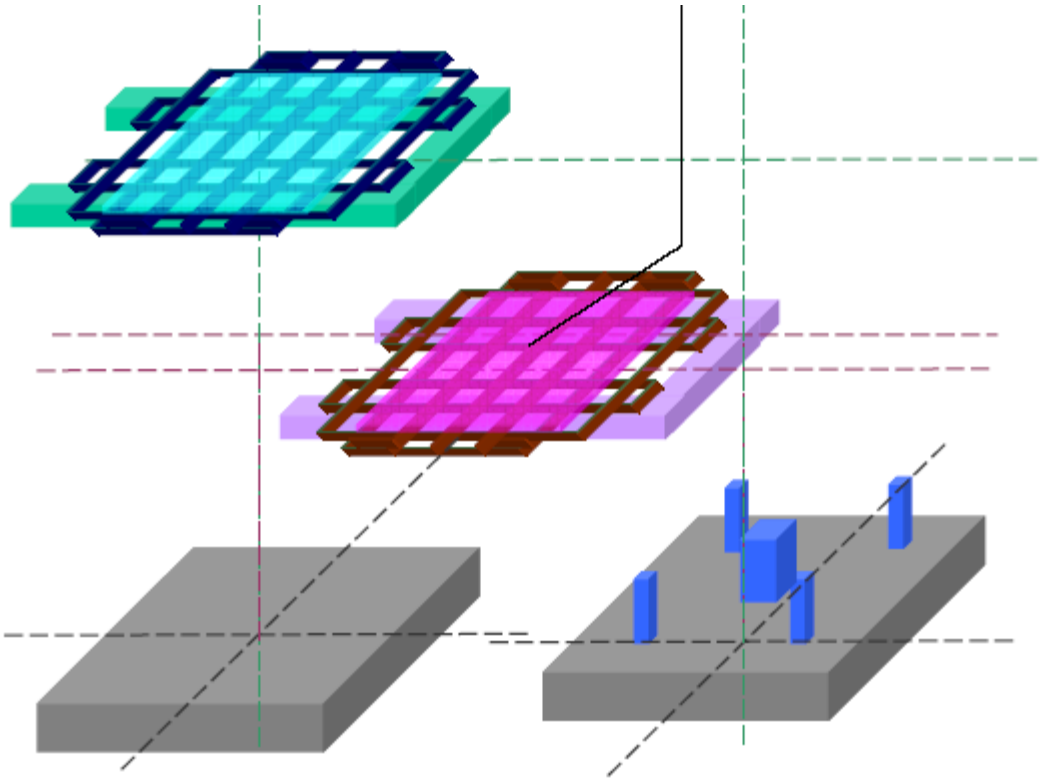

Company Confidential Ver.
Do not copy or distribute. Copyright 2010 CSOT

CSOT-CONFIDENTIAL

Plate Loader

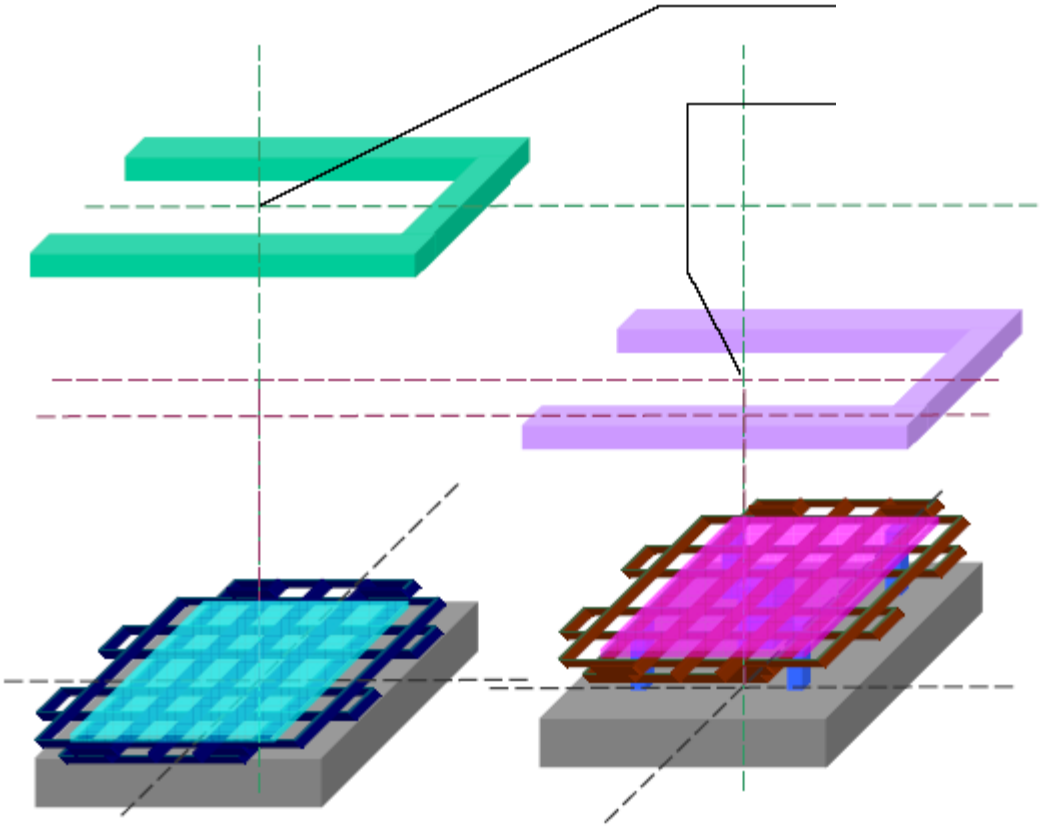

Company Confidential Ver.
Do not copy or distribute. Copyright 2010 CSOT

CSOT-CONFIDENTIAL

Mask Loader

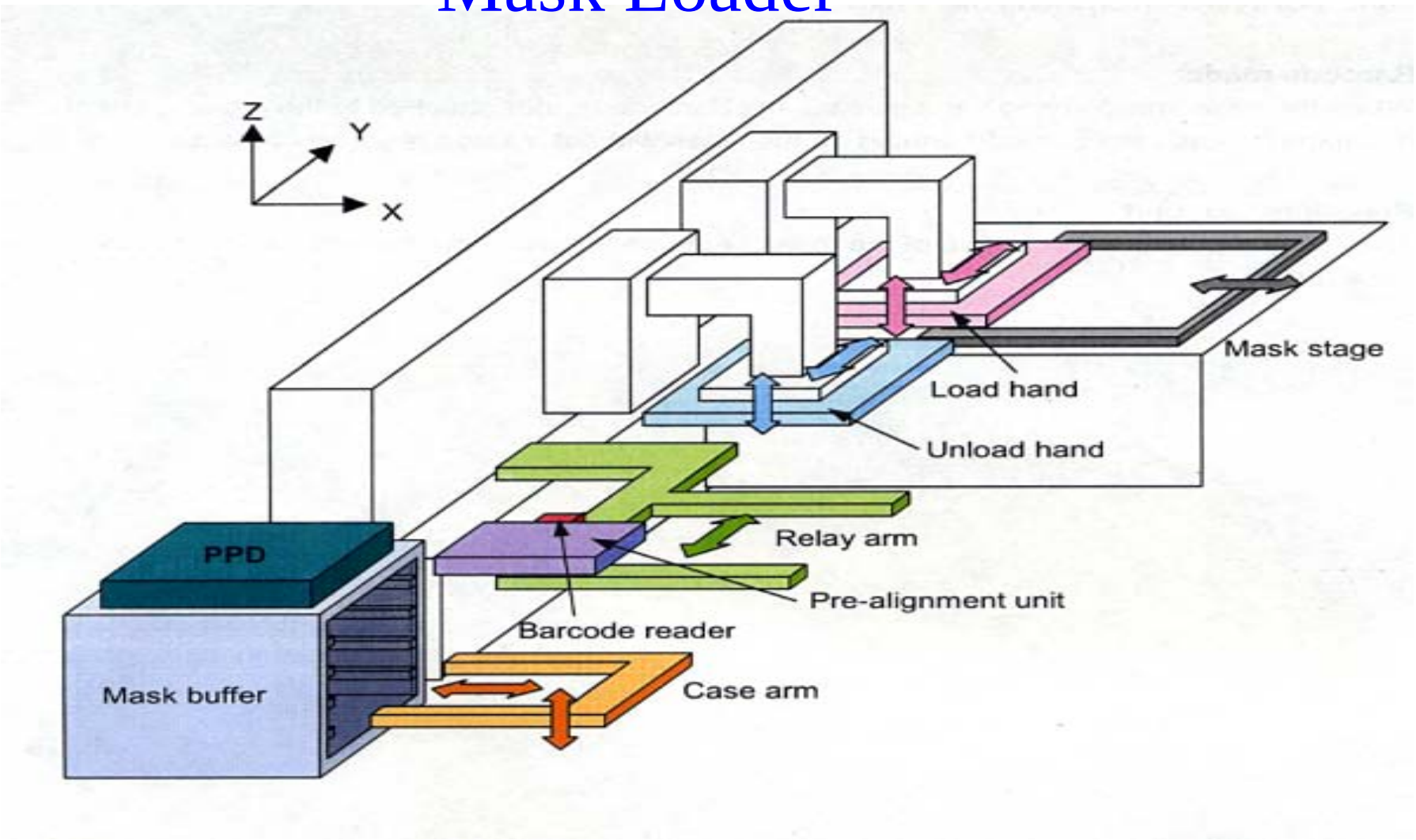

Do not copy or distribute. Copyright 2010 CSOT

CSOT-CONFIDENTIAL

Mask Loader

Mask Buffer：可存放5片Mask

Case Arm：搬送Mask進出Mask Buffer、PPD unit。

Relay Arm：只能做Y方向移動。

Load：Case Arm取Mask → Relay arm → Load Arm → Mask Stage。

Unload：Mask stage → Unload arm → Relay arm → Case arm → Buffer stage

Load/Unload Arm：Y方向為同軸(SY)移動機構。

Z軸(LZ、UZ)可分別上下位置移動。

Arm上各有6個爪子來抓取Mask。

Company Confidential Ver.
Do not copy or distribute. Copyright 2010 CSOT

CSOT-CONFIDENTIAL

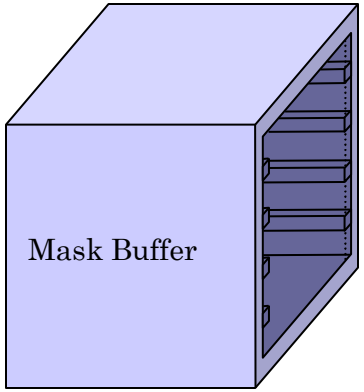

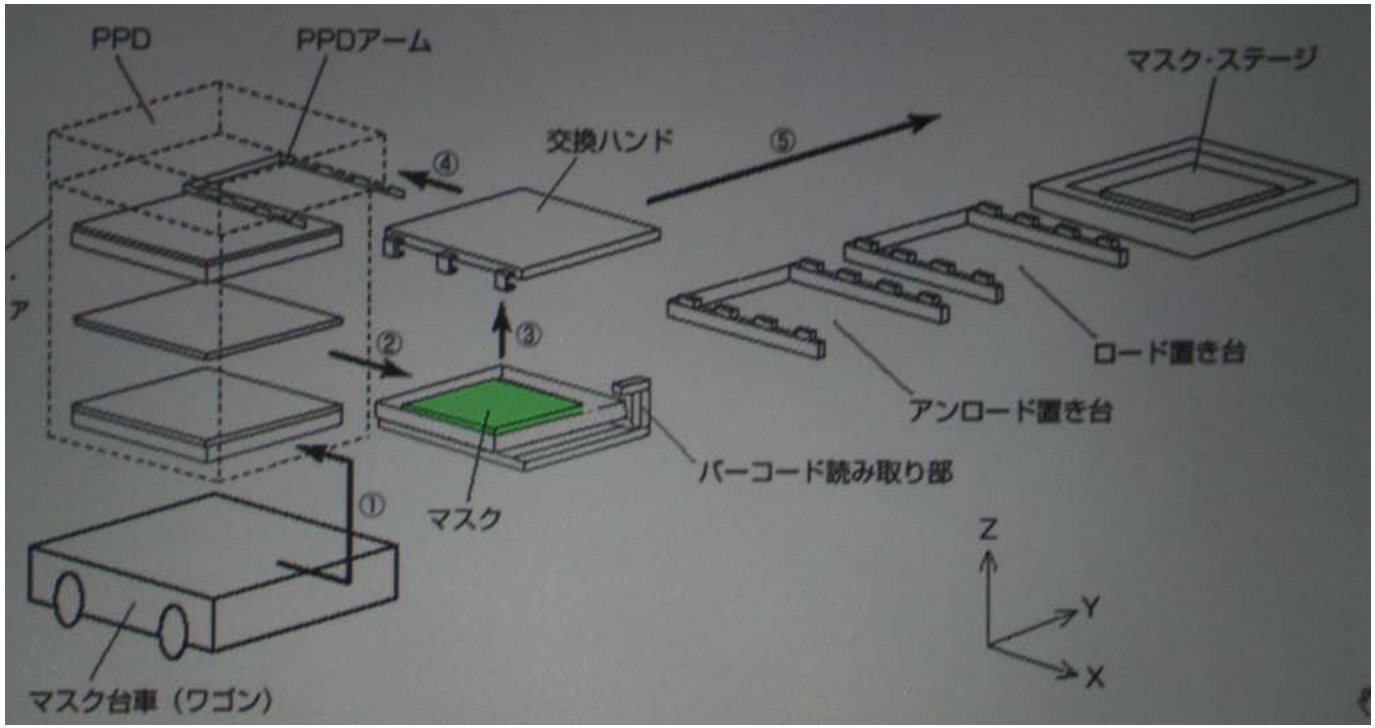

65S&86S compare

由於86S mask體積重量均大幅增加,因此改變mask load方式,所有mask均由光罩車送入最下層之loader port,再由case arm搬送至slot1~5,而exchange arm則負責於load, unload ,mask stage ,case arm四者之間搬送光罩

Company Confidential Ver.
Do not copy or distribute. Copyright 2010 CSOT

CSOT-CONFIDENTIAL

Mask Loader

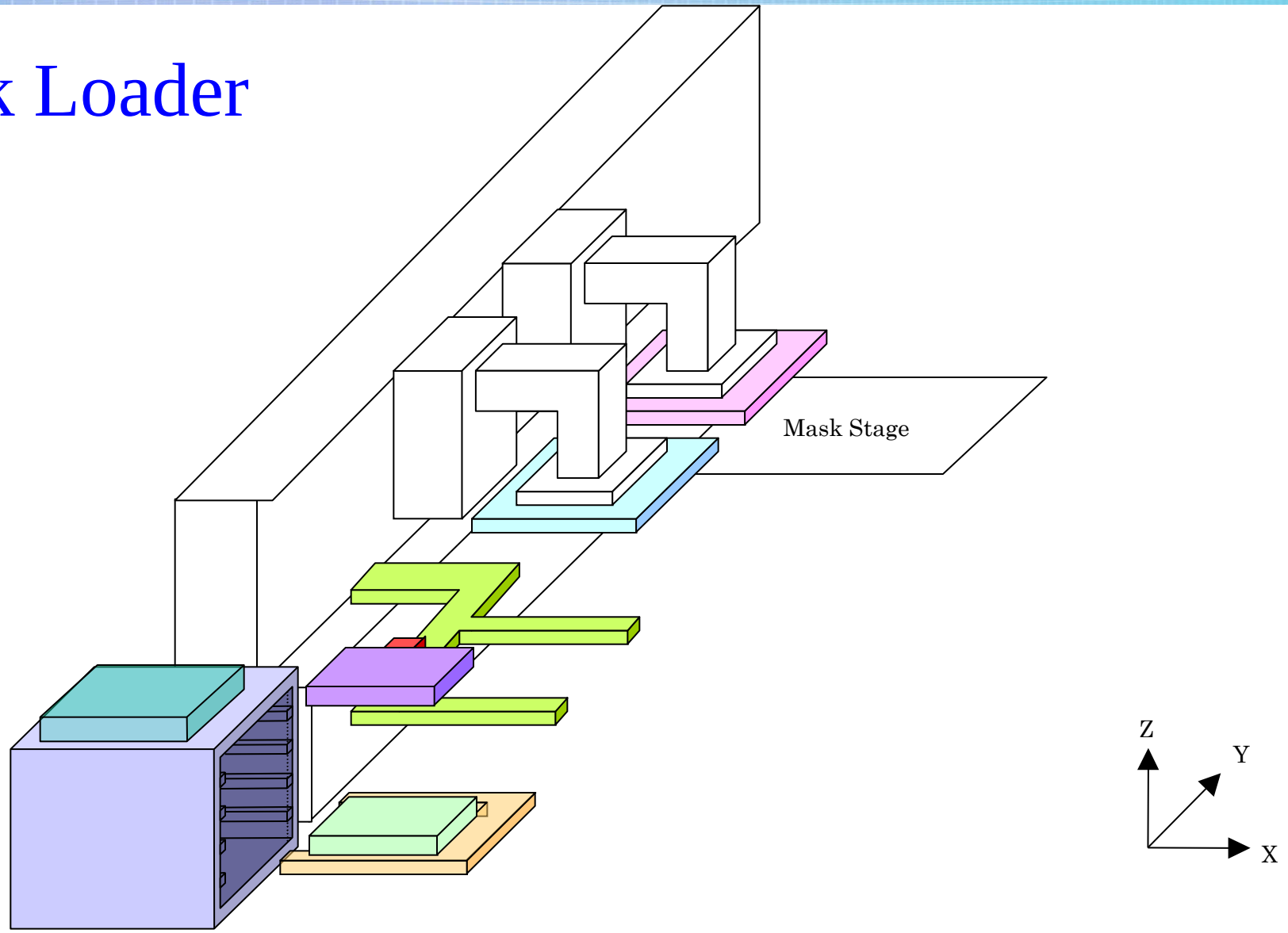

Company Confidential Ver.
Do not copy or distribute. Copyright 2010 CSOT

CSOT-CONFIDENTIAL

Mask Case

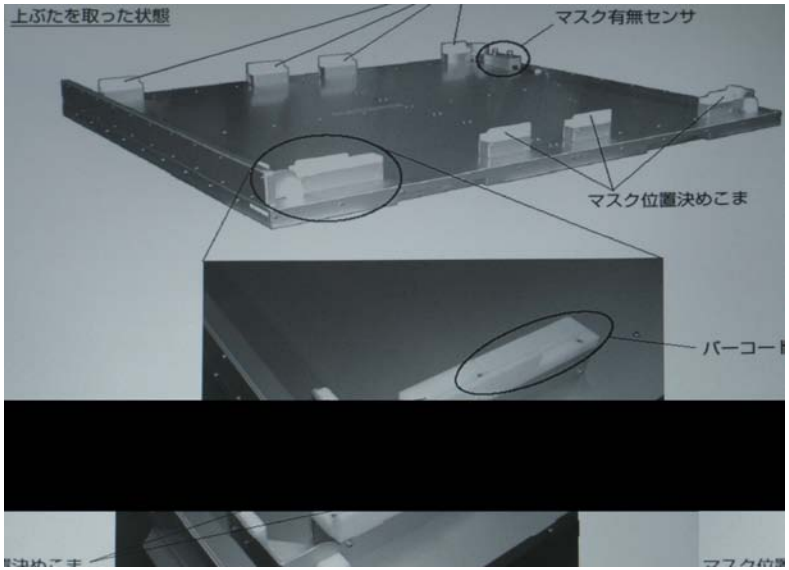

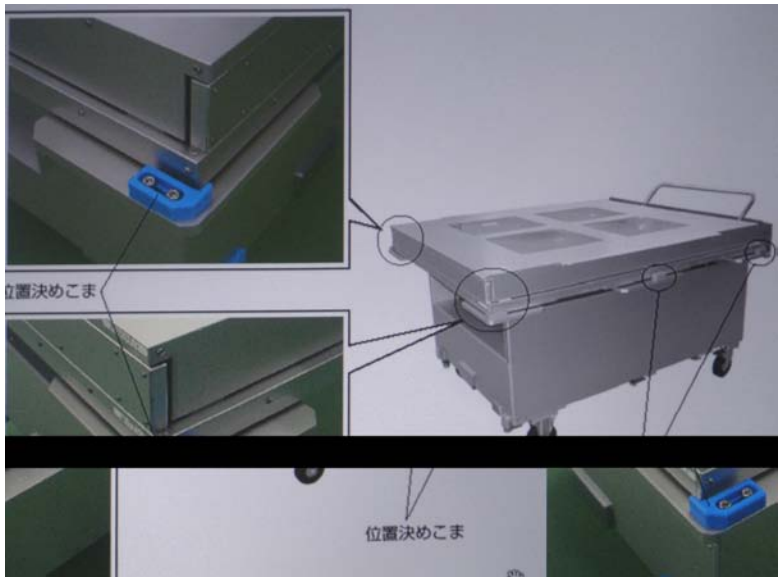

Do not copy or distribute. Copyright 2010 CSOT

CSOT-CONFIDENTIAL

Thank you !

Company Confidential Ver.
Do not copy or distribute. Copyright 2010 CSOT

CSOT-CONFIDENTIAL